LOT 28
HIDEAWAY PHASE 1C OR 2378/1584

STUBBS GARY L & TONYA A
86537 SECLUDED PL
YULEE, FL 32097

2025

42-2N-27-4374-0028-0000

BUILDING CHARACTERISTICS

ELEMENT	CD	CONSTRUCTION
Exterior Wall	30	VINYL 100
Roof Structur	03	GABLE/HIP 100
Roof Cover	03	COMP SHNGL 100
Interior Wall	05	DRYWALL 100
Interior Floo	13	LVT/LAMNT 50
Interior Floo	14	CARPET 50
Air Condition	03	CENTRAL 100
Heating Type	04	AIR DUCTED 100
Bedrooms		4 100
Bathrooms		2.5 100
Frame	02	WOOD FRAME 100
Stories	2.	2. 100
Units		0 100
Occupancy	00	NONE 100
Quality	06	Quality Level 06
DOR CODE	0100	SINGLE FAMILY
MAP NUM		MKT AREA 04
NEIGHBORHOOD/LOC	4071.00	

AREA TYPE	TOTAL GROSS AREA	PCT OF BASE	YEAR	TOT ADJ AREA	SUBAREA MARKET VALUE
BAS	993	100	2021	993	115,039
FGR	447	55	2021	246	28,499
FOP	32	30	2021	10	1,158
FOP	160	30	2021	48	5,561
FUS	1,468	100	2021	1,468	170,067
STR	52	10	2021	5	579
TOTALS	3,152			2,770	320,904

MARKET ADJUSTMENTS

TYPE	MDL	EFF. AREA	TOT ADJ PTS	EFF. BASE RATE	REPL. COST NEW	AYB	EYB	ECON	FNCT		NORM	% COND
0100	01	2,770	117.0240	117.02	324,145	2021	2021	0	0	0	1.00	99.00

1 SINGLE FAM – 100% - 2024 Heated Area: 2461 HX Base Yr 2024

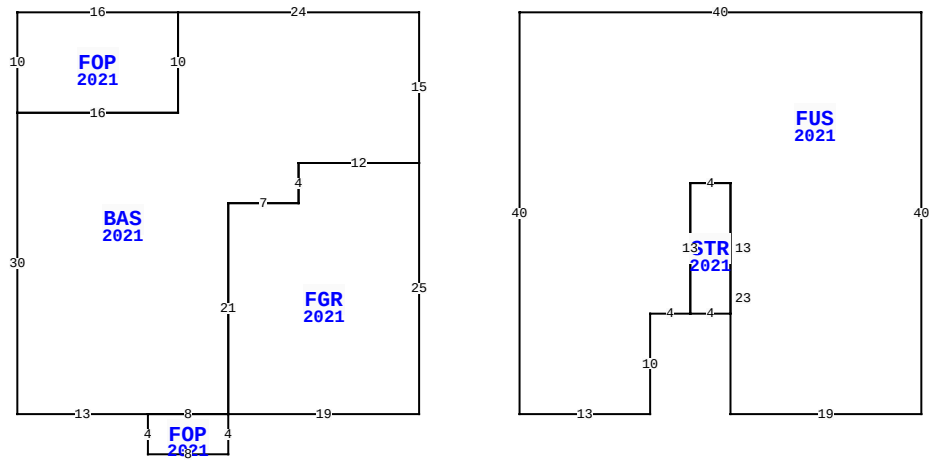

86537 SECLUDED PL, YULEE

BLD DATE	05/17/2022 NW	LGL DATE	
XF DATE		LAND DATE	
INC DATE		AG DATE	

NASSAU COUNTY PROPERTY

PAGE 1 of 1 4

VALUATION SUMMARY

VALUATION BY		STANDARD
Tax Group: 4	Tax Dist:	
BUILDING MARKET VALUE		320,904
TOTAL MARKET OB/XF VALUE		5,575
TOTAL LAND VALUE - MARKET		50,000
TOTAL MARKET VALUE		376,479
SOH/AGL Deduction		4,006
ASSESSED VALUE		372,473
TOTAL EXEMPTION VALUE	HX HB	50,722
BASE TAXABLE VALUE		321,751
TOTAL JUST VALUE		376,479
NCON VALUE		0
INCOME VALUE		
PREVIOUS YEAR MKT VALUE		361,976

PERMIT NUM	DESCRIPTION	AMT	ISSUED
20012299	NEW CONSTR	330,434	12/10/2020

SALES DATA

OFF RECORD Number	DATE	TYPE INST	Q / U	V / I	RSN CD	SALE PRICE
2484/0371	7/30/2021	WD	Q	I	01	347,500
GRANTOR: SEDA CONSTRUCTION COM						
GRANTEE: STUBBS GARY L & TON						
2441/1868	3/02/2021	WD	U	V	30	60,000
GRANTOR: SEMANIK EQUITY DEVELO						
GRANTEE: SEDA CONSTRUCTION C						

BUILDING NOTES

BUILDING DIMENSIONS

BAS=[YR=2021] W24 FOP=[YR=2021] W16 S10 E16 N10$ S10 W16 S30 E13 FOP=[YR=2021] S4 E8 N4 FGR=[YR=2021] E19 N25 W12 S4 W7 S21$ W8$ E8 N21 E7 N4 E12 N15$ PTR=E10 FUS=[YR=2021] S40 E13 N10 E4 STR=[YR=2021] N13 E4 S13 W4$ N13 E4 S23 E19 N40 W40$ W10$.

EXTRA FEATURES

LN	OB/XF CODE	DESCRIPTION	BLD	CAP	L	W	UNITS	UT	Adj R	ADJ UNIT PRICE	ORIG COND	YEAR ON	YEAR ACTUAL	Q	% COND	OB/XF MKT VALUE	NOTES
1	0811	CONCRETE B	0	100	0	0	1,083.00	SF	5.20	5.20	100	2021	2021	3	99	5,575	

LAND DESCRIPTION

TOTAL OB/XF 5,575

LN	USE CODE	CLS	LAND USE DESCRIPTION	CAP	RD	LOC ZONE	FRONT	DEPTH	TOT LND UTS	UNIT TYPE	DT	DPTH FACT	% COND	TOT ADJ	UNIT PRICE	ADJ UNIT PRICE	LAND VALUE	OTHER ADJUSTMENTS AND NOTES	YEAR	DENSITY	DECL	FRZ	YR	CONSRV
1	000100	C	RES	100		PUD	0.00	0.00	1.00	LT		1.00	1.00	1.00	50,000.00	50,000.00	50,000							

REVIEW DATE 06/30/2021 BY NW Total Acres: 0.00 Total Land Value: 50,000 Market: 0 Agricultural: 0 Common: 50,000 PRINTED 07/30/2025 BY SYS