LOT 3
HIDEAWAY PHASE 1C OR 2378/1584

HODZIC MIRSAD & IRENA
86781 LAZY LAKE CIRCLE
YULEE, FL 32097

2025

42-2N-27-4374-0003-0000

NASSAU COUNTY PROPERTY

BUILDING CHARACTERISTICS

ELEMENT	CD	CONSTRUCTION
Exterior Wall	30	VINYL 100
Roof Structur	03	GABLE/HIP 100
Roof Cover	03	COMP SHNGL 100
Interior Wall	05	DRYWALL 100
Interior Floo	13	LVT/LAMNT 50
Interior Floo	14	CARPET 50
Air Condition	03	CENTRAL 100
Heating Type	04	AIR DUCTED 100
Bedrooms		4 100
Bathrooms		2.5 100
Frame	02	WOOD FRAME 100
Stories	1.	1. 100
Units		1 100
Quality	06	Quality Level 06

DOR CODE 0100 SINGLE FAMILY
MAP NUM | MKT AREA 04
NEIGHBORHOOD/LOC 4071.00

AREA TYPE	TOTAL GROSS AREA	PCT OF BASE	YEAR	TOT ADJ AREA	SUBAREA MARKET VALUE
BAS	1,650	100	2024	1,650	183,299
FGR	460	55	2024	253	28,106
FOP	55	30	2024	16	1,777
FSP	140	40	2024	56	6,221
FUS	1,125	100	2024	1,125	124,976
STR	39	10	2024	4	444
TOTALS	3,469			3,104	344,823

MARKET ADJUSTMENTS

TYPE	MDL	EFF. AREA	TOT ADJ PTS	EFF. BASE RATE	REPL. COST NEW	AYB	EYB	ECON	FNCT		NORM	% COND
0100	01	3,104	111.0900	111.09	344,823	2023	2023	0	0	0	0.00	100.00

1 SINGLE FAM – 0% - 2025 Heated Area: 2775 HX Base Yr

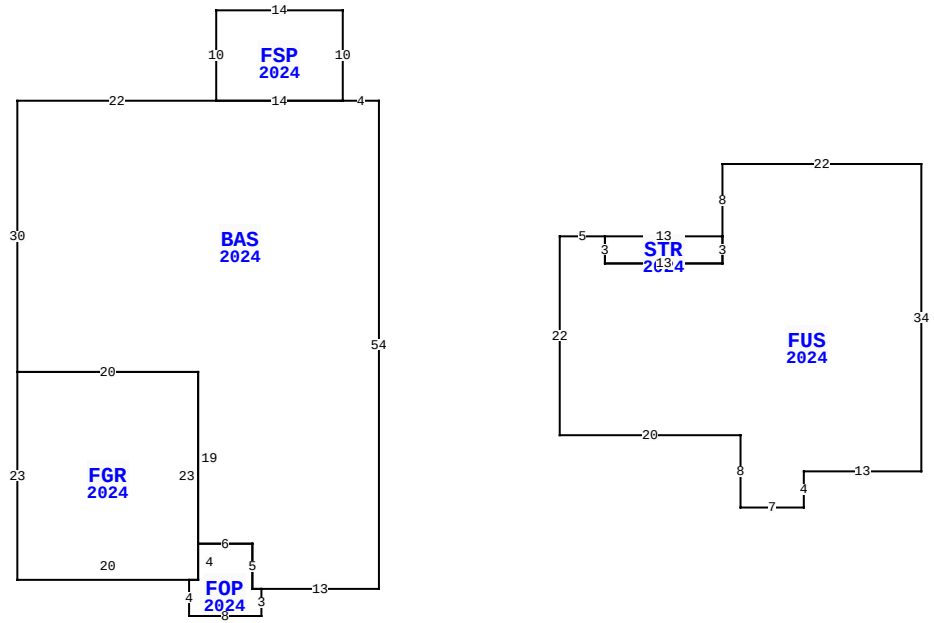

86781 LAZY LAKE CIR, YULEE

BLD DATE		LGL DATE	
XF DATE		LAND DATE	
INC DATE		AG DATE	

VALUATION SUMMARY

VALUATION BY	STANDARD
Tax Group: 4	Tax Dist:
BUILDING MARKET VALUE	344,823
TOTAL MARKET OB/XF VALUE	3,848
TOTAL LAND VALUE - MARKET	50,000
TOTAL MARKET VALUE	398,671
SOH/AGL Deduction	0
ASSESSED VALUE	398,671
TOTAL EXEMPTION VALUE	0
BASE TAXABLE VALUE	398,671
TOTAL JUST VALUE	398,671
NCON VALUE	0
INCOME VALUE	
PREVIOUS YEAR MKT VALUE	379,967

PERMIT NUM	DESCRIPTION	AMT	ISSUED
230013753	CO ISSUED		10/26/2023
230008337	HTD2806 G444 P190	505,472	06/28/2023

SALES DATA

OFF RECORD Number	DATE	TYPE INST	Q / U	V / I	RSN CD	SALE PRICE
2694/250	2/09/2024	WD	Q	I	02	476,900
GRANTOR: SEDA CONSTRUCTION COM						
GRANTEE: HODZIC MIRSAD & IRE						
2649/681	6/21/2023	WD	U	V	30	150,000
GRANTOR: SEMANIK EQUITY DEVELO						
GRANTEE: SEDA CONSTRUCTION C						

BUILDING NOTES

EXTRA FEATURES

LN	OB/XF CODE	DESCRIPTION	BLD	CAP	L	W	UNITS	UT	Adj R	ADJ UNIT PRICE	ORIG COND	YEAR ON	YEAR ACTUAL	Q	% COND	OB/XF MKT VALUE	NOTES
1	0810	CONCRETE A	0	0	0	0	592.00	SF	6.50	6.50	100	2024	2023		100	3,848	

BUILDING DIMENSIONS

BAS=[YR=2024;ORIG=10,10] E22 E14 E4 S54 W13 W1 N5 W6 N19 W20 N30 $
FUS=[YR=2024;ORIG=70,25] E5 S3 E13 N3 N8 E22 S34 W13 S4 W7 N8 W20 N22 $
FGR=[YR=2024;ORIG=10,40] E20 S23 W20 N23 $
FSP=[YR=2024;ORIG=46,10] W14 N10 E14 S10 $
FOP=[YR=2024;ORIG=30,59] E6 S5 E1 S3 W8 N4 E1 N4 $
STR=[YR=2024;ORIG=75,25] E13 S3 W13 N3 $
.

LAND DESCRIPTION

TOTAL OB/XF 3,848

LN	USE CODE	CLS	LAND USE DESCRIPTION	CAP	RD	LOC ZONE	FRONT	DEPTH	TOT LND UTS	UNIT TYPE	DT	DPTH FACT	% COND	TOT ADJ	UNIT PRICE	ADJ UNIT PRICE	LAND VALUE	OTHER ADJUSTMENTS AND NOTES	YEAR	DENSITY	DECL	FRZ	YR	CONSRV
1	000100	C	RES	0		PUD	0.00	0.00	1.00	LT		1.00	1.00	1.00	50,000.00	50,000.00	50,000							

REVIEW DATE 12/04/2023 BY NW Total Acres: 0.00 Total Land Value: 50,000 Market: 0 Agricultural: 0 Common: 50,000 PRINTED 07/30/2025 BY SYS