LOT 25
HIDEAWAY PHASE 1B PBK 8/301

**DIENER JOHN M & RAINA N**
86479 MOONLIT WALK CIR
YULEE, FL 32097

**2025**

**42-2N-27-4373-0025-0000**

## NASSAU COUNTY PROPERTY



## BUILDING CHARACTERISTICS

| ELEMENT | CD | CONSTRUCTION |
|---|---|---|
| Exterior Wall | 05 | AVERAGE 100 |
| Roof Structur | 03 | GABLE/HIP 100 |
| Roof Cover | 03 | COMP SHNGL 100 |
| Interior Wall | 05 | DRYWALL 100 |
| Interior Floo | 11 | CLAY TILE 50 |
| Interior Floo | 14 | CARPET 50 |
| Air Condition | 03 | CENTRAL 100 |
| Heating Type | 04 | AIR DUCTED 100 |
| Bedrooms | | 4 100 |
| Bathrooms | | 2.5 100 |
| Frame | 02 | WOOD FRAME 100 |
| Stories | 2. | 2. 100 |
| Units | | 0 100 |
| Occupancy | 00 | NONE 100 |
| Quality | 06 | Quality Level 06 |

| | | | |
|---|---|---|---|
| DOR CODE | 0100 | SINGLE FAMILY | |
| MAP NUM | | MKT AREA | 04 |
| NEIGHBORHOOD/LOC | 4071.0100 | | |

| AREA TYPE | TOTAL GROSS AREA | PCT OF BASE | YEAR | TOT ADJ AREA | SUBAREA MARKET VALUE |
|---|---|---|---|---|---|
| BAS | 1,650 | 100 | 2020 | 1,650 | 190,008 |
| FGR | 660 | 55 | 2020 | 363 | 41,801 |
| FOP | 55 | 30 | 2020 | 16 | 1,843 |
| FSP | 160 | 40 | 2020 | 64 | 7,370 |
| FUS | 1,156 | 100 | 2020 | 1,156 | 133,121 |
| PTO | 110 | 5 | 2020 | 6 | 690 |
| STR | 48 | 10 | 2020 | 5 | 576 |
| TOTALS | 3,839 | | | 3,260 | 375,410 |

## MARKET ADJUSTMENTS

| TYPE | MDL | EFF. AREA | TOT ADJ PTS | EFF. BASE RATE | REPL. COST NEW | AYB | EYB | ECON | FNCT | | NORM | % COND |
|---|---|---|---|---|---|---|---|---|---|---|---|---|
| 0100 | 01 | 3,260 | 116.9090 | 116.91 | 381,127 | 2020 | 2020 | 0 | 0 | 0 | 1.50 | 98.50 |

1 SINGLE FAM – 100% - 2021 Heated Area: 2806 HX Base Yr 2021

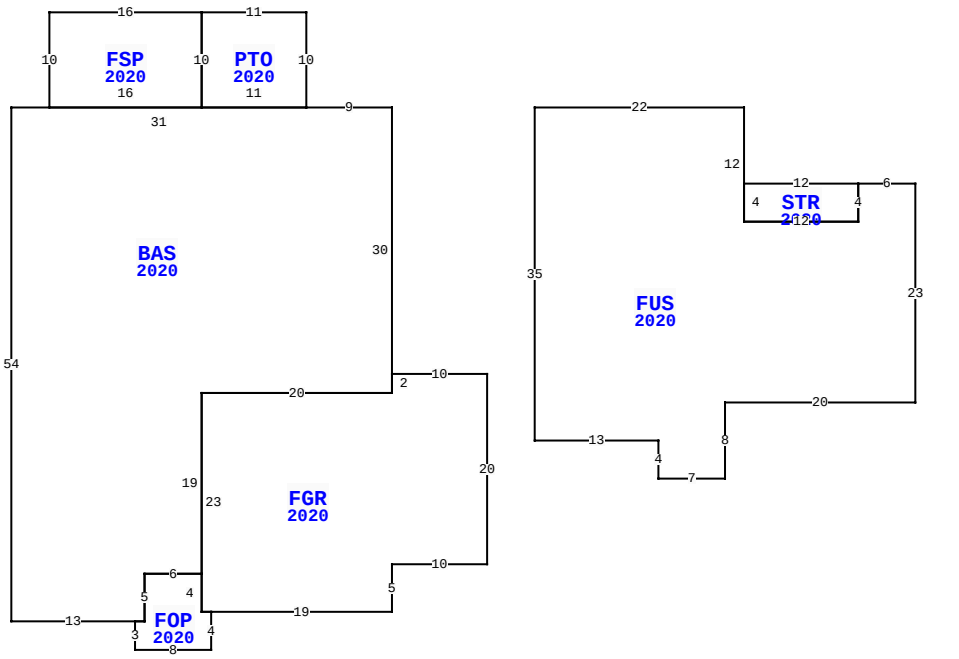


86479 MOONLIT WALK CIR, YULEE

| | | | |
|---|---|---|---|
| BLD DATE | 05/17/2022 NW | LGL DATE | |
| XF DATE | | LAND DATE | |
| INC DATE | | AG DATE | |

## VALUATION SUMMARY

| | | |
|---|---|---|
| VALUATION BY | | STANDARD |
| Tax Group: 4 | Tax Dist: | |
| BUILDING MARKET VALUE | | 375,410 |
| TOTAL MARKET OB/XF VALUE | | 4,347 |
| TOTAL LAND VALUE - MARKET | | 50,000 |
| TOTAL MARKET VALUE | | 429,757 |
| SOH/AGL Deduction | | 161,828 |
| ASSESSED VALUE | | 267,929 |
| TOTAL EXEMPTION VALUE | HX HB | 50,722 |
| BASE TAXABLE VALUE | | 217,207 |
| TOTAL JUST VALUE | | 429,757 |
| NCON VALUE | | 0 |
| INCOME VALUE | | |
| PREVIOUS YEAR MKT VALUE | | 412,826 |

| PERMIT NUM | DESCRIPTION | AMT | ISSUED |
|---|---|---|---|
| 20001012 | NEW CONSTR | 379,701 | 02/10/2020 |

## SALES DATA

| OFF RECORD Number | DATE | TYPE INST | Q / U | V / I | RSN CD | SALE PRICE |
|---|---|---|---|---|---|---|
| 2372/1166 | 6/30/2020 | WD | Q | I | 01 | 312,400 |
| GRANTOR: SEDA CONSTRUCTION COM | | | | | | |
| GRANTEE: DIENER JOHN M & RAI | | | | | | |
| 2348/0694 | 3/18/2020 | WD | U | V | 30 | 48,000 |
| GRANTOR: SEMANIK EQUITY DEV & | | | | | | |
| GRANTEE: SEDA CONSTRUCTION C | | | | | | |

## BUILDING NOTES

## BUILDING DIMENSIONS

BAS=[YR=2020] W9 PTO=[YR=2020] N10 W11 FSP=[YR=2020] W16 S10 E16 N10$ S10 E11$ W31 S54 E13 FOP=[YR=2020] S3 E8 N4 FGR=[YR=2020] E19 N5 E10 N20 W10 S2 W20 S23 E1$ W1 N4 W6 S5 W1$ E1 N5 E6 N19 E20 N30$ PTR=E15 FUS=[YR=2020] S35 E13 S4 E7 N8 E20 N23 W6 STR=[YR=2020] W12 S4 E12 N4$ S4 W12 N12 W22$ W15$.

## EXTRA FEATURES

| LN | OB/XF CODE | DESCRIPTION | BLD | CAP | L | W | UNITS | UT | Adj R | ADJ UNIT PRICE | ORIG COND | YEAR ON | YEAR ACTUAL | Q | % COND | OB/XF MKT VALUE | NOTES |
|---|---|---|---|---|---|---|---|---|---|---|---|---|---|---|---|---|---|
| 1 | 0811 | CONCRETE B | 0 | 100 | 0 | 0 | 853.00 | SF | 5.20 | 5.20 | 100 | 2020 | 2020 | 3 | 98 | 4,347 | |

## LAND DESCRIPTION

TOTAL OB/XF 4,347

| LN | USE CODE | CLS | LAND USE DESCRIPTION | CAP | RD | LOC ZONE | FRONT | DEPTH | TOT LND UTS | UNIT TYPE | DT | DPTH FACT | % COND | TOT ADJ | UNIT PRICE | ADJ UNIT PRICE | LAND VALUE | OTHER ADJUSTMENTS AND NOTES | YEAR | DENSITY | DECL | FRZ | YR | CONSRV |
|---|---|---|---|---|---|---|---|---|---|---|---|---|---|---|---|---|---|---|---|---|---|---|---|---|
| 1 | 000100 | C | RES | 100 | | PUD | 0.00 | 0.00 | 1.00 | LT | | 1.00 | 1.00 | 1.00 | 50,000.00 | 50,000.00 | 50,000 | | | | | | | |

REVIEW DATE 10/21/2020 BY NW Total Acres: 0.00 Total Land Value: 50,000 Market: 0 Agricultural: 0 Common: 50,000 PRINTED 07/30/2025 BY SYS