LOT 250
IN OR 1331/1373
HICKORY VILLAGE #1 PB 6/369

HOYT BETH A
86109 SAND HICKORY TRAIL
YULEE, FL 32097

**2025**

**42-2N-27-435H-0250-0000**

## NASSAU COUNTY PROPERTY



## BUILDING CHARACTERISTICS

| ELEMENT | CD | CONSTRUCTION |
|---|---|---|
| Exterior Wall | 10 | ABOVE AVG 70 |
| Exterior Wall | 16 | WD FR STUC 30 |
| Roof Structur | 03 | GABLE/HIP 100 |
| Roof Cover | 03 | COMP SHNGL 100 |
| Interior Wall | 05 | DRYWALL 100 |
| Interior Floo | 14 | CARPET 80 |
| Interior Floo | 08 | SHT VINYL 20 |
| Air Condition | 03 | CENTRAL 100 |
| Heating Type | 04 | AIR DUCTED 100 |
| Bedrooms | | 5 100 |
| Bathrooms | | 3 100 |
| Frame | 02 | WOOD FRAME 100 |
| Stories | 1.5 | 1.5 100 |
| Units | | 0 100 |
| Occupancy | 00 | NONE 100 |
| Quality | 06 | Quality Level 06 |
| DOR CODE | 0100 | SINGLE FAMILY |
| MAP NUM | | MKT AREA 04 |
| NEIGHBORHOOD/LOC | 4047.00 | |

| AREA TYPE | TOTAL GROSS AREA | PCT OF BASE | YEAR | TOT ADJ AREA | SUBAREA MARKET VALUE |
|---|---|---|---|---|---|
| BAS | 1,951 | 100 | 2005 | 1,951 | 217,201 |
| FGR | 551 | 55 | 2005 | 303 | 33,733 |
| FOP | 37 | 30 | 2005 | 11 | 1,225 |
| FOP | 120 | 30 | 2005 | 36 | 4,007 |
| FUS | 418 | 100 | 2005 | 418 | 46,535 |
| STR | 59 | 10 | 2019 | 6 | 668 |
| TOTALS | 3,136 | | | 2,725 | 303,368 |

## MARKET ADJUSTMENTS

| TYPE | MDL | EFF. AREA | TOT ADJ PTS | EFF. BASE RATE | REPL. COST NEW | AYB | EYB | ECON | FNCT | | NORM | % COND |
|---|---|---|---|---|---|---|---|---|---|---|---|---|
| 0100 | 01 | 2,725 | 122.5440 | 122.54 | 333,922 | 2005 | 2005 | 0 | 0 | 0 | 9.15 | 90.85 |

1 SINGLE FAM – 100% - 2006 Heated Area: 2369 HX Base Yr 2006

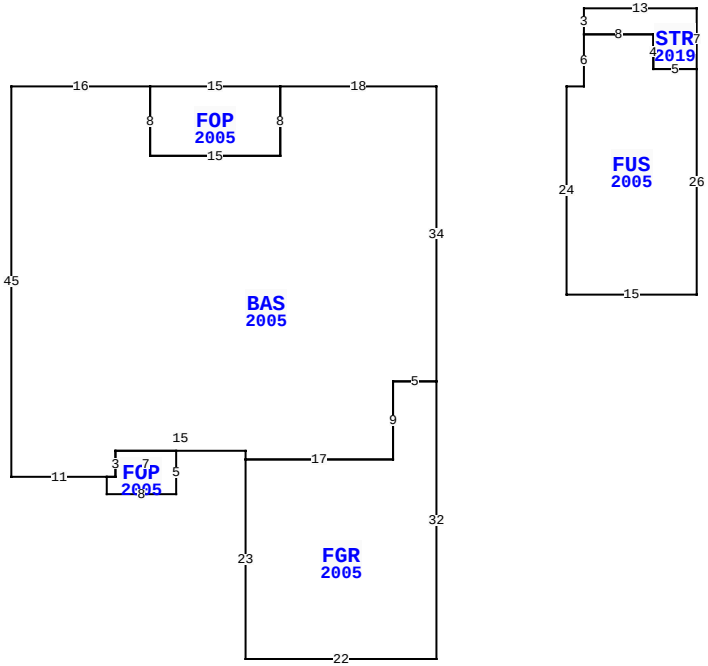


86109 SAND HICKORY TRL, YULEE

| | | | |
|---|---|---|---|
| BLD DATE | 03/14/2023 NW | LGL DATE | |
| XF DATE | | LAND DATE | |
| INC DATE | | AG DATE | |

## VALUATION SUMMARY

| | | |
|---|---|---|
| VALUATION BY | | STANDARD |
| Tax Group: 4 | Tax Dist: | |
| BUILDING MARKET VALUE | | 303,368 |
| TOTAL MARKET OB/XF VALUE | | 3,521 |
| TOTAL LAND VALUE - MARKET | | 55,000 |
| TOTAL MARKET VALUE | | 361,889 |
| SOH/AGL Deduction | | 172,869 |
| ASSESSED VALUE | | 189,020 |
| TOTAL EXEMPTION VALUE | HX HB | 50,722 |
| BASE TAXABLE VALUE | | 138,298 |
| TOTAL JUST VALUE | | 361,889 |
| NCON VALUE | | 0 |
| INCOME VALUE | | |
| PREVIOUS YEAR MKT VALUE | | 348,406 |

| PERMIT NUM | DESCRIPTION | AMT | ISSUED |
|---|---|---|---|
| M09315 | MECH OTHER | 0 | 02/01/2005 |
| E0514131 | ELEC OTHER | 2,000 | 02/01/2005 |
| P0508923 | OTHER | 0 | 02/01/2005 |
| B0414105 | NEW CONSTR | 195,225 | 11/01/2004 |
| R046902 | REPAIR/RRF | 1,500 | 11/01/2004 |

## SALES DATA

| OFF RECORD Number | DATE | TYPE INST | Q / U | V / I | RSN CD | SALE PRICE |
|---|---|---|---|---|---|---|
| 1331/1373 | 7/08/2005 | WD | Q | I | | 195,300 |
| GRANTOR: MATTAMY (JACKSONVILLE | | | | | | |
| GRANTEE: HOYT BETH A | | | | | | |
| 1274/1081 | 11/17/2004 | WD | U | V | 19 | 950,400 |
| GRANTOR: MARSH CREEK DEVELOPME | | | | | | |
| GRANTEE: MATTAMY (JAX) PARTN | | | | | | |

## BUILDING NOTES

## BUILDING DIMENSIONS

BAS=[YR=2005] W18 FOP=[YR=2005] W15 S8 E15 N8$ S8 W15 N8 W16 S45 E11 FOP=[YR=2005] S2 E8 N5 W7 S3 W1$ E1 N3 E15 S1 FGR=[YR=2005] S23 E22 N32 W5 S9 W17$ E17 N9 E5 N34$ PTR= E15 FUS=[YR=2005] E2 N6 STR=[YR=2019] N3 E13 S7 W5 N4 W8$ E8 S4 E5 S26 W15 N24$ W15$.

## EXTRA FEATURES

| LN | OB/XF CODE | DESCRIPTION | BLD | CAP | L | W | UNITS | UT | Adj R | ADJ UNIT PRICE | ORIG COND | YEAR ON | YEAR ACTUAL | Q | % COND | OB/XF MKT VALUE | NOTES |
|---|---|---|---|---|---|---|---|---|---|---|---|---|---|---|---|---|---|
| 1 | 0811 | CONCRETE B | 0 | 100 | 0 | 0 | 806.00 | SF | 5.20 | 5.20 | 100 | 2005 | 2005 | 3 | 84 | 3,521 | |

## LAND DESCRIPTION

TOTAL OB/XF 3,521

| LN | USE CODE | CLS | LAND USE DESCRIPTION | CAP | RD | LOC ZONE | FRONT | DEPTH | TOT LND UTS | UNIT TYPE | DT | DPTH FACT | % COND | TOT ADJ | UNIT PRICE | ADJ UNIT PRICE | LAND VALUE | OTHER ADJUSTMENTS AND NOTES | YEAR | DENSITY | DECL | FRZ | YR | CONSRV |
|---|---|---|---|---|---|---|---|---|---|---|---|---|---|---|---|---|---|---|---|---|---|---|---|---|
| 1 | 000100 | C | RES | 100 | | RSF-2 | 0.00 | 0.00 | 1.00 | LT | | 1.00 | 1.00 | 1.00 | 55,000.00 | 55,000.00 | 55,000 | | | | | | | |

REVIEW DATE 05/12/2019 BY KBA Total Acres: 0.00 Total Land Value: 55,000 Market: 0 Agricultural: 0 Common: 55,000 PRINTED 07/30/2025 BY SYS