LOT 196
IN OR 1465/563
HICKORY VILLAGE #4 PB 7/122

MOGAVERO STEVE C & JOANNE G
86034 MAPLE LEAF PLACE
YULEE, FL 32097

2025

42-2N-27-435H-0196-0000

BUILDING CHARACTERISTICS

ELEMENT	CD	CONSTRUCTION
Exterior Wall	16	WD FR STUC 100
Roof Structur	03	GABLE/HIP 100
Roof Cover	03	COMP SHNGL 100
Interior Wall	05	DRYWALL 100
Interior Floo	14	CARPET 80
Interior Floo	08	SHT VINYL 20
Air Condition	03	CENTRAL 100
Heating Type	04	AIR DUCTED 100
Bedrooms		5 100
Bathrooms		3 100
Frame	02	WOOD FRAME 100
Stories	1.5	1.5 100
Units		0 100
Occupancy	00	NONE 100
Quality	06	Quality Level 06
DOR CODE	0100	SINGLE FAMILY
MAP NUM		MKT AREA 04
NEIGHBORHOOD/LOC	4047.00	

AREA TYPE	TOTAL GROSS AREA	PCT OF BASE	YEAR	TOT ADJ AREA	SUBAREA MARKET VALUE
BAS	1,951	100	2006	1,951	223,536
FGR	551	55	2006	303	34,717
FOP	37	30	2006	11	1,260
FSP	120	40	2006	48	5,500
FUS	418	100	2006	418	47,893
STR	59	10	2019	6	687
TOTALS	3,136			2,737	313,592

MARKET ADJUSTMENTS

TYPE	MDL	EFF. AREA	TOT ADJ PTS	EFF. BASE RATE	REPL. COST NEW	AYB	EYB	ECON	FNCT		NORM	% COND
0100	01	2,737	122.5440	122.54	335,392	2006	2011	0	0	0	6.50	93.50

1 SINGLE FAM – 100% - 2007 Heated Area: 2369 HX Base Yr 2007

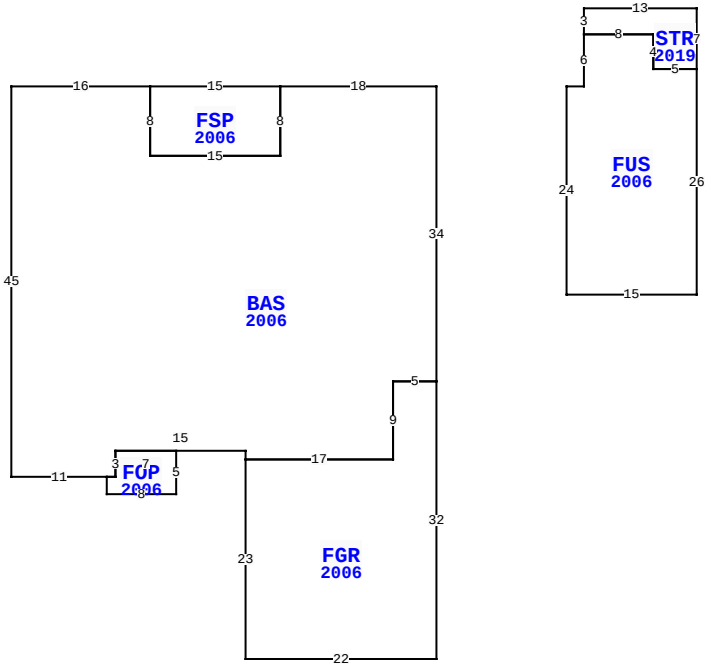

86034 MAPLE LEAF PL, YULEE

BLD DATE	03/14/2023 NW	LGL DATE	
XF DATE		LAND DATE	
INC DATE		AG DATE	

NASSAU COUNTY PROPERTY

PAGE 1 of 1 4

VALUATION SUMMARY

VALUATION BY		STANDARD
Tax Group: 4	Tax Dist:	
BUILDING MARKET VALUE		313,592
TOTAL MARKET OB/XF VALUE		28,125
TOTAL LAND VALUE - MARKET		55,000
TOTAL MARKET VALUE		396,717
SOH/AGL Deduction		186,675
ASSESSED VALUE		210,042
TOTAL EXEMPTION VALUE	HX HB	50,722
BASE TAXABLE VALUE		159,320
TOTAL JUST VALUE		396,717
NCON VALUE		0
INCOME VALUE		
PREVIOUS YEAR MKT VALUE		384,214

PERMIT NUM	DESCRIPTION	AMT	ISSUED
20001135	REROOF	30,654	02/12/2020
B21566	SWIM POOL	27,000	06/01/2008
B17367	NEW CONSTR	175,867	12/01/2006
B17367	NEW CONSTR	175,867	12/01/2006
C17367	CO ISSUED	175,867	04/01/2006
M11405	MECH OTHER	0	04/01/2006

SALES DATA

OFF RECORD Number	DATE	TYPE INST	Q / U	V / I	RSN CD	SALE PRICE
1465/0563	12/13/2006	WD	Q	I		272,900
GRANTOR: MATTAMY (JACKSONVILLE						
GRANTEE: MOGAVERO STEVE C &						
1337/1410	8/01/2005	WD	U	V	19	2,360,000
GRANTOR: MARSH CREEK DEVELOPME						
GRANTEE: MATTAMY (JACKSONVIL						

BUILDING NOTES

BUILDING DIMENSIONS

BAS=[YR=2006] W18 FSP=[YR=2006] W15 S8 E15 N8$ S8 W15 N8 W16 S45 E11 FOP=[YR=2006] S2 E8N5 W7 S3 W1$ E1 N3 E15 S1 FGR=[YR=2006] S23 E22 N32 W5 S9 W17$E17 N9 E5 N34$ PTR= E15 FUS=[YR=2006] E2 N6 STR=[YR=2019] N3 E13 S7 W5 N4 W8$ E8 S4 E5 S26 W15 N24$ W15$.

EXTRA FEATURES

LN	OB/XF CODE	DESCRIPTION	BLD	CAP	L	W	UNITS	UT	Adj R	ADJ UNIT PRICE	ORIG COND	YEAR ON	YEAR ACTUAL	Q	% COND	OB/XF MKT VALUE	NOTES
1	0504	FP-ELECTRI	0	100	0	0	1.00	UT	2,000.00	2,000.00	100	2006	2006	3	89	1,780	
2	0811	CONCRETE B	0	100	0	0	732.00	SF	5.20	5.20	100	2006	2006	3	86	3,274	
3	0861	POOL GUNIT	0	100	0	0	430.00	SF	85.00	85.00	100	2009	2009	3	52	19,006	
4	0845	KOOL DECK	0	100	0	0	630.00	SF	7.25	7.25	100	2009	2009	3	89	4,065	

LAND DESCRIPTION

TOTAL OB/XF 28,125

LN	USE CODE	CLS	LAND USE DESCRIPTION	CAP	RD	LOC ZONE	FRONT	DEPTH	TOT LND UTS	UNIT TYPE	DT	DPTH FACT	% COND	TOT ADJ	UNIT PRICE	ADJ UNIT PRICE	LAND VALUE	OTHER ADJUSTMENTS AND NOTES	YEAR	DENSITY	DECL	FRZ	YR	CONSRV
1	000100	C	RES	100		RSF-2	0.00	0.00	1.00	LT		1.00	1.00	1.00	55,000.00	55,000.00	55,000							

REVIEW DATE 05/12/2019 BY KBA Total Acres: 0.00 Total Land Value: 55,000 Market: 0 Agricultural: 0 Common: 55,000 PRINTED 07/30/2025 BY SYS