LOT 184
IN OR 2312/532
HICKORY VILLAGE #4 PB 7/122

SCHANTZ STEVEN M & CINDY KAY
86083 MAPLE LEAF PLACE
YULEE, FL 32097

2025

42-2N-27-435H-0184-0000

NASSAU COUNTY PROPERTY

BUILDING CHARACTERISTICS

ELEMENT	CD	CONSTRUCTION
Exterior Wall	10	ABOVE AVG 70
Exterior Wall	16	WD FR STUC 30
Roof Structur	03	GABLE/HIP 100
Roof Cover	03	COMP SHNGL 100
Interior Wall	05	DRYWALL 100
Interior Floo	14	CARPET 80
Interior Floo	08	SHT VINYL 20
Air Condition	03	CENTRAL 100
Heating Type	04	AIR DUCTED 100
Bedrooms		5 100
Bathrooms		3 100
Frame	02	WOOD FRAME 100
Stories	1.5	1.5 100
Units		0 100
Occupancy	00	NONE 100
Quality	06	Quality Level 06

DOR CODE 0100 SINGLE FAMILY
MAP NUM | MKT AREA 04
NEIGHBORHOOD/LOC 4047.00

AREA TYPE	TOTAL GROSS AREA	PCT OF BASE	YEAR	TOT ADJ AREA	SUBAREA MARKET VALUE
BAS	1,982	100	2006	1,982	213,338
FGR	512	55	2006	282	30,354
FOP	37	30	2006	11	1,184
FSP	128	40	2006	51	5,489
FUS	612	100	2006	612	65,874
STP	9	10	2006	1	108
TOTALS	3,280			2,939	316,347

MARKET ADJUSTMENTS

TYPE	MDL	EFF. AREA	TOT ADJ PTS	EFF. BASE RATE	REPL. COST NEW	AYB	EYB	ECON	FNCT		NORM	% COND
0100	01	2,939	117.8290	117.83	346,302	2006	2006	0	0	0	8.65	91.35

1 SINGLE FAM – 100% - 2020 Heated Area: 2594 HX Base Yr 2020

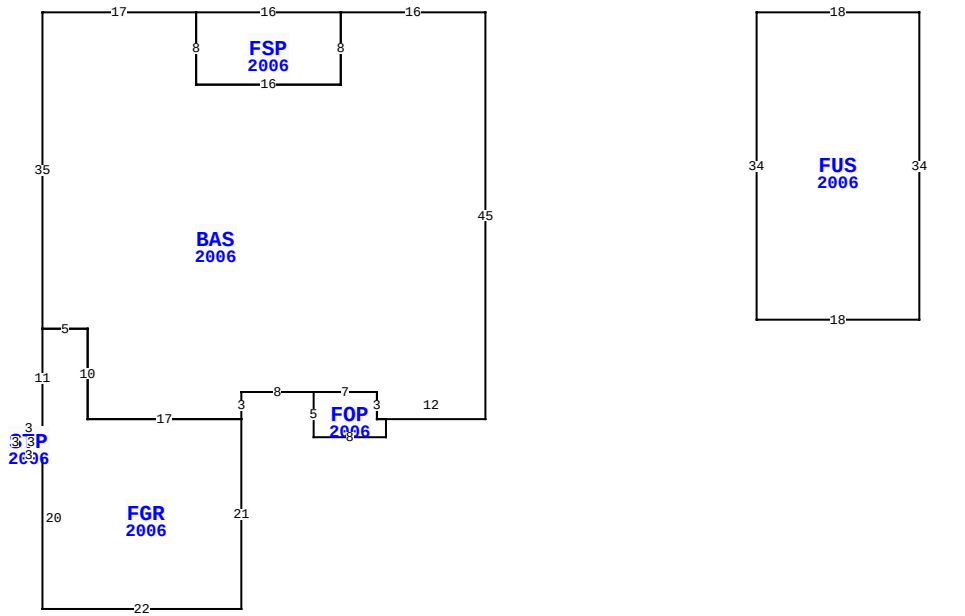

86083 MAPLE LEAF PL, YULEE

BLD DATE	03/14/2023 NW	LGL DATE	
XF DATE		LAND DATE	
INC DATE		AG DATE	

VALUATION SUMMARY

VALUATION BY		STANDARD
Tax Group: 4	Tax Dist:	
BUILDING MARKET VALUE		316,347
TOTAL MARKET OB/XF VALUE		3,479
TOTAL LAND VALUE - MARKET		55,000
TOTAL MARKET VALUE		374,826
SOH/AGL Deduction		115,781
ASSESSED VALUE		259,045
TOTAL EXEMPTION VALUE	HX HB	50,722
BASE TAXABLE VALUE		208,323
TOTAL JUST VALUE		374,826
NCON VALUE		0
INCOME VALUE		
PREVIOUS YEAR MKT VALUE		360,699

PERMIT NUM	DESCRIPTION	AMT	ISSUED
18002972	REPAIR/RRF	11,000	03/21/2018
B0516784	NEW CONSTR	175,867	08/25/2006
M10992	TANKS/BLRS	0	02/01/2006

SALES DATA

OFF RECORD Number	DATE	TYPE INST	Q U	V I	RSN CD	SALE PRICE
2312/0532	10/15/2019	WD	Q	I	02	252,000
GRANTOR: SMITH JULIE ET AL						
GRANTEE: SCHANTZ STEVEN MICH						
2314/1371	12/11/2018	FJ	U	I	11	0
GRANTOR: SMITH ROBERT EARL JR						
GRANTEE: SMITH JULIE ET AL						

BUILDING NOTES

BUILDING DIMENSIONS

BAS=[YR=2006] W16 FSP=[YR=2006] W16 S8 E16 N8$ S8 W16 N8 W17 S35 FGR=[YR=2006] S11 STP=[YR=2006] W3 S3 E3 N3$ S20 E22 N21 W17 N10 W5$ E5 S10 E17 N3 E8 FOP=[YR=2006] S5 E8 N2 W1 N3 W7$ E7 S3 E12 N45$ PTR= E30 FUS=[YR=2006] E18 S34 W18 N34 $ W30 $.

EXTRA FEATURES

LN	OB/XF CODE	DESCRIPTION	BLD	CAP	L	W	UNITS	UT	Adj R	ADJ UNIT PRICE	ORIG COND	YEAR ON	YEAR ACTUAL	Q	% COND	OB/XF MKT VALUE	NOTES
1	0811	CONCRETE B	0	100	0	0	778.00	SF	5.20	5.20	100	2006	2006	3	86	3,479	

LAND DESCRIPTION

TOTAL OB/XF 3,479

LN	USE CODE	CLS	LAND USE DESCRIPTION	CAP	RD	LOC ZONE	FRONT	DEPTH	TOT LND UTS	UNIT TYPE	DT	DPTH FACT	% COND	TOT ADJ	UNIT PRICE	ADJ UNIT PRICE	LAND VALUE	OTHER ADJUSTMENTS AND NOTES	YEAR	DENSITY	DECL	FRZ	YR	CONSRV
1	000100	C	RES	100		RSF-2	0.00	0.00	1.00	LT		1.00	1.00	1.00	55,000.00	55,000.00	55,000							

REVIEW DATE 05/12/2019 BY KBA Total Acres: 0.00 Total Land Value: 55,000 Market: 0 Agricultural: 0 Common: 55,000 PRINTED 07/30/2025 BY SYS