LOT 84
HICKORY VILLAGE #1 PB 6/369

ANDERSON JOHN H L/E/
8633 AUTUMN GREEN DR
JACKSONVILLE, FL 32256

2025

42-2N-27-435H-0084-0000

NASSAU COUNTY PROPERTY

BUILDING CHARACTERISTICS

ELEMENT	CD	CONSTRUCTION
Exterior Wall	10	ABOVE AVG 70
Exterior Wall	16	WD FR STUC 30
Roof Structur	03	GABLE/HIP 100
Roof Cover	03	COMP SHNGL 100
Interior Wall	05	DRYWALL 100
Interior Floo	13	LVT/LAMNT 70
Interior Floo	14	CARPET 30
Air Condition	03	CENTRAL 100
Heating Type	04	AIR DUCTED 100
Bedrooms		5 100
Bathrooms		3 100
Frame	02	WOOD FRAME 100
Stories	1.5	1.5 100
Units		0 100
Occupancy	00	NONE 100
Quality	06	Quality Level 06
DOR CODE	0100	SINGLE FAMILY
MAP NUM		MKT AREA 04
NEIGHBORHOOD/LOC	4047.00	

AREA TYPE	TOTAL GROSS AREA	PCT OF BASE	YEAR	TOT ADJ AREA	SUBAREA MARKET VALUE
BAS	1,951	100	2005	1,951	215,357
FEP	240	80	2005	192	21,193
FGR	551	55	2005	303	33,446
FOP	37	30	2005	11	1,215
FUS	418	100	2005	418	46,140
PTO	64	5	2005	3	332
STR	59	10	2019	6	662
TOTALS	3,320			2,884	318,344

MARKET ADJUSTMENTS

TYPE	MDL	EFF. AREA	TOT ADJ PTS	EFF. BASE RATE	REPL. COST NEW	AYB	EYB	ECON	FNCT		NORM	% COND
0100	01	2,884	121.5044	121.50	350,406	2005	2005	0	0	0	9.15	90.85

1 SINGLE FAM – 0% - 2025 Heated Area: 2369 HX Base Yr

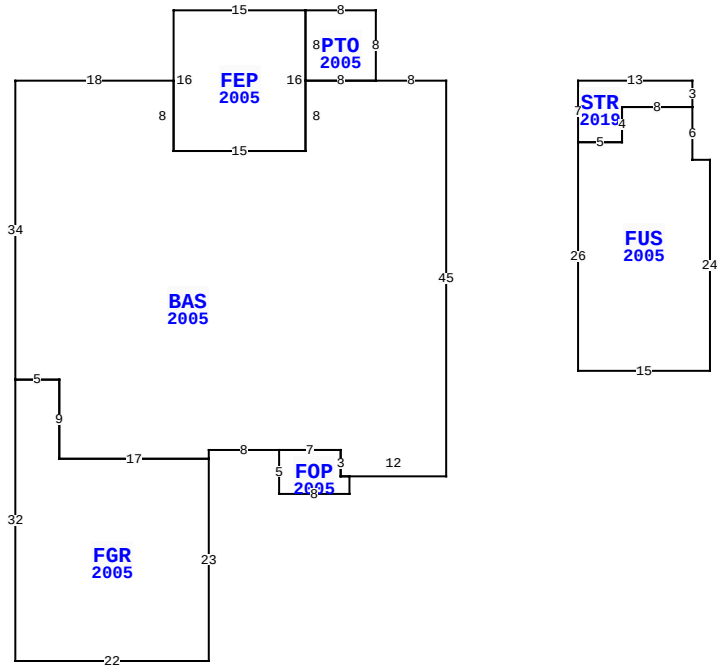

86015 SAND HICKORY TRL, YULEE

BLD DATE	03/14/2023 NW	LGL DATE	
XF DATE		LAND DATE	
INC DATE		AG DATE	

VALUATION SUMMARY

VALUATION BY	STANDARD
Tax Group: 4	Tax Dist:
BUILDING MARKET VALUE	318,344
TOTAL MARKET OB/XF VALUE	3,245
TOTAL LAND VALUE - MARKET	55,000
TOTAL MARKET VALUE	376,589
SOH/AGL Deduction	0
ASSESSED VALUE	376,589
TOTAL EXEMPTION VALUE	0
BASE TAXABLE VALUE	376,589
TOTAL JUST VALUE	376,589
NCON VALUE	0
INCOME VALUE	
PREVIOUS YEAR MKT VALUE	362,427

PERMIT NUM	DESCRIPTION	AMT	ISSUED
E15354	ELEC OTHER	750	07/01/2005
E0514124	ELEC OTHER	2,000	02/01/2005
M0509165	MECH OTHER	0	02/01/2005
P0408823	OTHER	0	12/01/2004
R046933	REPAIR/RRF	1,500	12/01/2004
B0414155	NEW CONSTR	198,975	12/01/2004

SALES DATA

OFF RECORD Number	DATE	TYPE INST	Q U	V I	RSN CD	SALE PRICE
2730/1088	8/07/2024	QC	U	I	11	100
GRANTOR: ANDERSON JOHN H						
GRANTEE: POSEY JACOB & AMY						
1311/0787	4/21/2005	WD	Q	I		201,600
GRANTOR: MATTAMY (JACKSONVILLE						
GRANTEE: ANDERSON JOHN H & S						

BUILDING NOTES

BUILDING DIMENSIONS

BAS=[YR=2005] W8 PTO=[YR=2005] N8 W8 FEP=[YR=2005] W15 S16 E15 N16$ S8 E8 $ W8 S8 W15 N8 W18 S34 FGR=[YR=2005] S32 E22 N23 W17 N9 W5$ E5 S9 E17 N1 E8 FOP=[YR=2005] S5 E8 N2 W1 N3 W7$ E7 S3 E12 N45$ PTR=E15 STR=[YR=2019] E13 S3 FUS=[YR=2005] S6 E2 S24 W15 N26 E5 N4 E8$ W8 S4 W5 N7$ W15$.

EXTRA FEATURES

LN	OB/XF CODE	DESCRIPTION	BLD	CAP	L	W	UNITS	UT	Adj R	ADJ UNIT PRICE	ORIG COND	YEAR ON	YEAR ACTUAL	Q	% COND	OB/XF MKT VALUE	NOTES
1	0811	CONCRETE B	0	0	0	0	743.00	SF	5.20	5.20	100	2005	2005	3	84	3,245	

LAND DESCRIPTION

TOTAL OB/XF 3,245

LN	USE CODE	CLS	LAND USE DESCRIPTION	CAP	RD	LOC ZONE	FRONT	DEPTH	TOT LND UTS	UNIT TYPE	DT	DPTH FACT	% COND	TOT ADJ	UNIT PRICE	ADJ UNIT PRICE	LAND VALUE	OTHER ADJUSTMENTS AND NOTES	YEAR	DENSITY	DECL	FRZ	YR	CONSRV
1	000100	C	RES	0		RSF-2	0.00	0.00	1.00	LT		1.00	1.00	1.00	55,000.00	55,000.00	55,000							

REVIEW DATE 10/16/2019 BY KW Total Acres: 0.00 Total Land Value: 55,000 Market: 0 Agricultural: 0 Common: 55,000 PRINTED 07/30/2025 BY SYS