LOT 33
HICKORY VILLAGE #4 PB 7/122

LIM KIMHAN L/E/
86292 SAND HICKORY TRAIL
YULEE, FL 32097

2025

42-2N-27-435H-0033-0000

NASSAU COUNTY PROPERTY

BUILDING CHARACTERISTICS

ELEMENT	CD	CONSTRUCTION
Exterior Wall	10	ABOVE AVG 70
Exterior Wall	16	WD FR STUC 30
Roof Structur	03	GABLE/HIP 100
Roof Cover	03	COMP SHNGL 100
Interior Wall	05	DRYWALL 100
Interior Floo	14	CARPET 80
Interior Floo	08	SHT VINYL 20
Air Condition	03	CENTRAL 100
Heating Type	04	AIR DUCTED 100
Bedrooms		4 100
Bathrooms		3 100
Frame	02	WOOD FRAME 100
Stories	1.	1. 100
Units		0 100
Occupancy	00	NONE 100
Quality	06	Quality Level 06

DOR CODE	0100	SINGLE FAMILY	
MAP NUM		MKT AREA	04
NEIGHBORHOOD/LOC	4047.00		

AREA TYPE	TOTAL GROSS AREA	PCT OF BASE	YEAR	TOT ADJ AREA	SUBAREA MARKET VALUE
BAS	247	100	2006	247	26,587
BAS	2,190	100	2006	2,190	235,727
FGR	242	55	2006	133	14,315
FGR	457	55	2006	251	27,017
FOP	36	30	2006	11	1,184
FOP	36	30	2006	11	1,184
FOP	70	30	2006	21	2,260
FOP	407	30	2006	122	13,132
STP	9	10	2006	1	108
TOTALS	3,694			2,987	321,514

MARKET ADJUSTMENTS

TYPE	MDL	EFF. AREA	TOT ADJ PTS	EFF. BASE RATE	REPL. COST NEW	AYB	EYB	ECON	FNCT		NORM	% COND
0100	01	2,987	117.8290	117.83	351,958	2006	2006	0	0	0	8.65	91.35

1 SINGLE FAM – 0% - 0 Heated Area: 2437 HX Base Yr

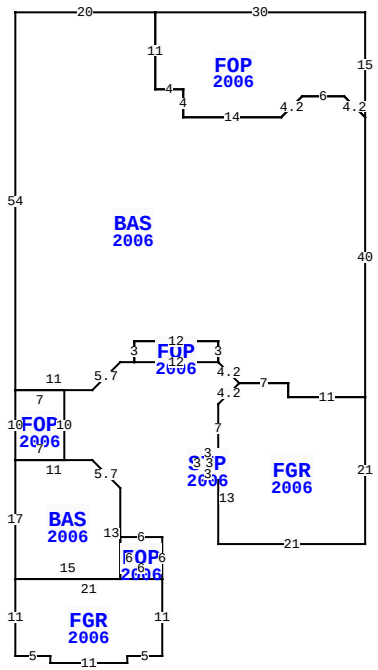

86292 SAND HICKORY TRL, YULEE

BLD DATE	03/14/2023	NW	LGL DATE	
XF DATE	03/14/2007	JM	LAND DATE	03/14/2007 JM
INC DATE			AG DATE	

VALUATION SUMMARY

VALUATION BY	STANDARD
Tax Group: 4	Tax Dist:
BUILDING MARKET VALUE	321,514
TOTAL MARKET OB/XF VALUE	4,650
TOTAL LAND VALUE - MARKET	55,000
TOTAL MARKET VALUE	381,164
SOH/AGL Deduction	15,029
ASSESSED VALUE	366,135
TOTAL EXEMPTION VALUE	0
BASE TAXABLE VALUE	366,135
TOTAL JUST VALUE	381,164
NCON VALUE	0
INCOME VALUE	
PREVIOUS YEAR MKT VALUE	366,819

PERMIT NUM	DESCRIPTION	AMT	ISSUED
E16996	ELEC OTHER	2,000	03/01/2006
M11292	MECH OTHER	0	03/01/2006
P10840	OTHER	0	03/01/2006
C17123	CO ISSUED	190,119	02/01/2006
R08915	REPAIR/RRF	3,500	02/01/2006
B17123	NEW CONSTR	190,119	02/01/2006

SALES DATA

OFF RECORD Number	DATE	TYPE INST	Q / U	V / I	RSN CD	SALE PRICE
2530/1456	1/18/2022	LE	U	I	11	100
GRANTOR: LIM KIMHAN						
GRANTEE: SAO ROCHANA						
1461/0701	11/27/2006	WD	Q	I		282,900
GRANTOR: COPPENBARGER HOMES						
GRANTEE: LIM KIMHAN						

BUILDING NOTES

EXTRA FEATURES

LN	OB/XF CODE	DESCRIPTION	BLD	CAP	L	W	UNITS	UT	Adj R	ADJ UNIT PRICE	ORIG COND	YEAR ON	YEAR ACTUAL	Q	% COND	OB/XF MKT VALUE	NOTES
1	0855	CONC PAVER	0	0	0	0	124.00	SF	10.00	10.00	100	2006	2006	3	86	1,066	
2	0812	CONCRETE C	0	0	0	0	1,042.00	SF	4.00	4.00	100	2006	2006	3	86	3,584	

BUILDING DIMENSIONS

FOP=[YR=2006] W30 BAS=[YR=2006] W20 S54 FOP=[YR=2006] S10 BAS=[YR=2006] S17 FGR=[YR=2006] S11 E5 S1 E11 N1 E5 N11 FOP=[YR=2006] N6 W6 S6 E6$ W21$ E15 N13 U4 L4 W11$ E7 N10 W7$ E11 U4 R4 E2 FOP=[YR=2006] E12 N3 W12 S3$ N3 E12 S3 D3 R3 FGR=[YR=2006] D3 L3 S7 STP=[YR=2006] W3 S3 E 3 N3$ S13 E21 N21 W11 N2 W7$ E 7 S2 E11 N40 U3 L3 W6 D3 L3 W14 N4 W4 N11$ S11 E4 S4 E14 U3 R3 E6 D3 R3 N15$.

LAND DESCRIPTION

TOTAL OB/XF 4,650

LN	USE CODE	CLS	LAND USE DESCRIPTION	CAP	RD	LOC ZONE	FRONT	DEPTH	TOT LND UTS	UNIT TYPE	DT	DPTH FACT	% COND	TOT ADJ	UNIT PRICE	ADJ UNIT PRICE	LAND VALUE	OTHER ADJUSTMENTS AND NOTES	YEAR	DENSITY	DECL	FRZ	YR	CONSRV
1	000100	C	RES	0		RSF-2	0.00	0.00	1.00	LT		1.00	1.00	1.00	55,000.00	55,000.00	55,000							

REVIEW DATE 05/12/2019 BY KBA Total Acres: 0.00 Total Land Value: 55,000 Market: 0 Agricultural: 0 Common: 55,000 PRINTED 07/30/2025 BY SYS