LOT 18
CLAXTON ACRES PB 5/257

THURMAN KENNITH E
85305 LINDSEY KAY COURT
YULEE, FL 32097

2025

42-2N-27-430C-0018-0000

BUILDING CHARACTERISTICS

ELEMENT	CD	CONSTRUCTION
Exterior Wall	30	VINYL 100
Roof Structur	03	GABLE/HIP 100
Roof Cover	03	COMP SHNGL 100
Interior Wall	05	DRYWALL 100
Interior Floo	13	LVT/LAMNT 80
Interior Floo	11	CLAY TILE 20
Air Condition	03	CENTRAL 100
Heating Type	04	AIR DUCTED 100
Bedrooms		5 100
Bathrooms		2 100
Frame	02	WOOD FRAME 100
Stories	2.	2. 100
Units		0 100
Occupancy	00	NONE 100
Quality	06	Quality Level 06
DOR CODE	0100	SINGLE FAMILY
MAP NUM		MKT AREA 04
NEIGHBORHOOD/LOC	4048.00	

AREA TYPE	TOTAL GROSS AREA	PCT OF BASE	YEAR	TOT ADJ AREA	SUBAREA MARKET VALUE
BAS	1,834	100	2009	1,834	185,699
DCK	384	10	2025	38	3,847
FOP	60	30	2009	18	1,823
FUS	1,096	100	2020	1,096	110,974
STP	40	10	2009	4	405
STR	44	10	2022	4	405
TOTALS	3,458			2,994	303,153

MARKET ADJUSTMENTS

TYPE	MDL	EFF. AREA	TOT ADJ PTS	EFF. BASE RATE	REPL. COST NEW	AYB	EYB	ECON	FNCT		NORM	% COND
0200	01	2,994	114.8022	103.32	309,340	2009	2019	0	0	0	2.00	98.00

1 SFR MODULR – 100% - 2024 Heated Area: 2930 HX Base Yr 2024

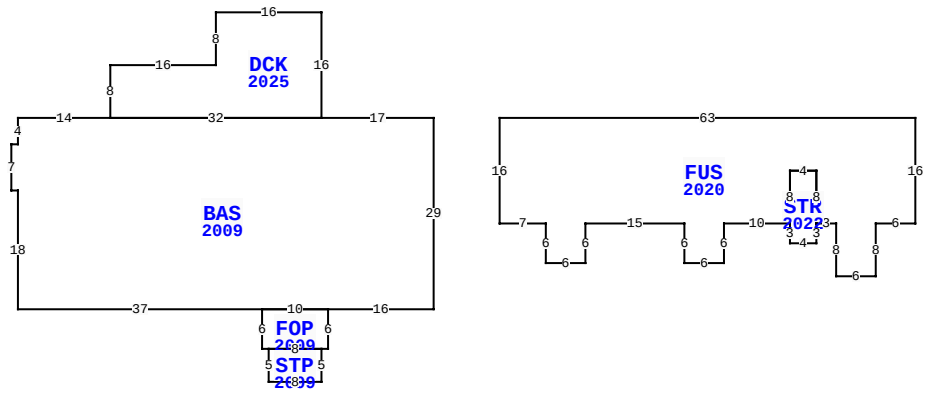

85305 LINDSEY KAY CT, YULEE

BLD DATE		LGL DATE	
XF DATE		LAND DATE	05/09/2025 MLU
INC DATE		AG DATE	

NASSAU COUNTY PROPERTY

PAGE 1 of 2 4

VALUATION SUMMARY

VALUATION BY		STANDARD
Tax Group: 4	Tax Dist:	
BUILDING MARKET VALUE		321,420
TOTAL MARKET OB/XF VALUE		5,134
TOTAL LAND VALUE - MARKET		60,000
TOTAL MARKET VALUE		386,554
SOH/AGL Deduction		34,186
ASSESSED VALUE		352,368
TOTAL EXEMPTION VALUE	HX HB	50,722
BASE TAXABLE VALUE		301,646
TOTAL JUST VALUE		386,554
NCON VALUE		3,851
INCOME VALUE		
PREVIOUS YEAR MKT VALUE		339,221

PERMIT NUM	DESCRIPTION	AMT	ISSUED
B1632180	MTLBLDG	0	04/26/2016
C22287	CO ISSUED	0	04/28/2009
B22287	NEW CONSTR	0	02/01/2009
E21605	ELEC OTHER	0	02/01/2009
M14386	MECH OTHER	0	02/01/2009
P13671	OTHER	0	02/01/2009

SALES DATA

OFF RECORD Number	DATE	TYPE INST	Q / U	V / I	RSN CD	SALE PRICE
2587/0075	8/26/2022	WD	Q	I	01	435,000
GRANTOR: NORTH EAST FLORIDA HO						
GRANTEE: THURMAN KENNITH E						
2546/0881	3/10/2022	WD	Q	I	01	312,000
GRANTOR: JONES MIRANDA M & KEN						
GRANTEE: NORTH EAST FLORIDA						

BUILDING NOTES

EXTRA FEATURES

LN	OB/XF CODE	DESCRIPTION	BLD	CAP	L	W	UNITS	UT	Adj R	ADJ UNIT PRICE	ORIG COND	YEAR ON	YEAR ACTUAL	Q	% COND	OB/XF MKT VALUE	NOTES
2	0812	CONCRETE C	0	100	0	0	1,351.00	SF	4.00	4.00	100	2016	2016	3	95	5,134	

BUILDING DIMENSIONS

BAS=[YR=2009;ORIG=0,0] W17 W32 W14 S4 W1 S7 E1 S18 E37 E10 E16 N29 $
FUS=[YR=2020;ORIG=10,0] E63 S16 W6 S8 W6 N8 W3 N8 W4 S8 W10 S6 W6 N6 W15 S6 W6 N6 W7 N16 $
DCK=[YR=2025;ORIG=-17,-16] S16 W32 N8 E16 N8 E16 $
FOP=[YR=2009;ORIG=-26,29] S6 E1 E8 E1 N6 W10 $
STR=[YR=2022;ORIG=58,16] N8 W4 S8 S3 E4 N3 $
STP=[YR=2009;ORIG=-25,35] S5 E8 N5 W8 $
PTR=[ORIG=0,0] E10 W10 $
.

LAND DESCRIPTION

TOTAL OB/XF 5,134

LN	USE CODE	CLS	LAND USE DESCRIPTION	CAP	RD	LOC ZONE	FRONT	DEPTH	TOT LND UTS	UNIT TYPE	DT	DPTH FACT	% COND	TOT ADJ	UNIT PRICE	ADJ UNIT PRICE	LAND VALUE	OTHER ADJUSTMENTS AND NOTES	YEAR	DENSITY	DECL	FRZ	YR	CONSRV
1	000100	C	RES	100		RM	0.00	0.00	1.00	LT		1.00	1.00	1.00	60,000.00	60,000.00	60,000							

REVIEW DATE 02/14/2025 BY KW Total Acres: 0.00 Total Land Value: 60,000 Market: 0 Agricultural: 0 Common: 60,000 PRINTED 07/30/2025 BY SYS

LOT 18
CLAXTON ACRES PB 5/257

THURMAN KENNITH E
85305 LINDSEY KAY COURT
YULEE, FL 32097

2025

42-2N-27-430C-0018-0000

BUILDING CHARACTERISTICS

ELEMENT	CD	CONSTRUCTION
Exterior Wall	25	MOD METAL 100
Roof Structur	10	STEEL FRME 100
Roof Cover	12	MODULAR MT 100
Interior Wall	07	NONE 100
Interior Floo	03	CONC FINSH 100
Air Condition	01	NONE 100
Heating Type	01	NONE 100
Bedrooms		0 100
Bathrooms		0 100
Frame	05	STEEL 100
Stories	1.	1. 100
Units		0 100
Occupancy	00	NONE 100
Quality	06	Quality Level 06

DOR CODE 0100 SINGLE FAMILY
MAP NUM | MKT AREA 04
NEIGHBORHOOD/LOC 4048.00

AREA TYPE	TOTAL GROSS AREA	PCT OF BASE	YEAR	TOT ADJ AREA	SUBAREA MARKET VALUE
BAS	864	100	2016	864	18,267
TOTALS	864			864	18,267

MARKET ADJUSTMENTS

TYPE	MDL	EFF. AREA	TOT ADJ PTS	EFF. BASE RATE	REPL. COST NEW	AYB	EYB	ECON	FNCT		NORM	% COND
6500	01	864	62.1000	22.98	19,855	2016	2016	0	0	0	8.00	92.00

2 GARAGE RES – 100% - 2024 Heated Area: 864 HX Base Yr 2024

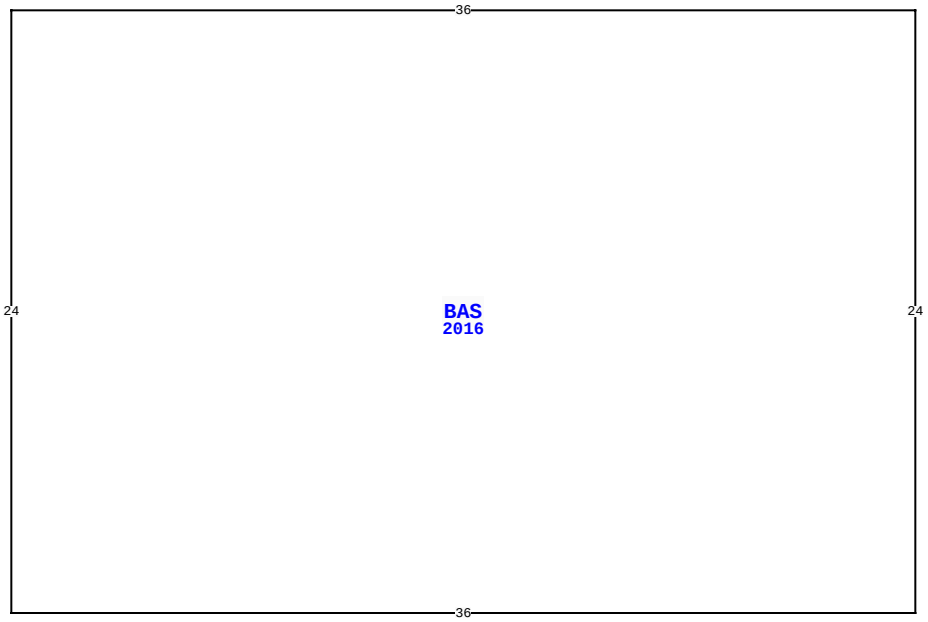

85305 LINDSEY KAY CT, YULEE

BLD DATE		LGL DATE	
XF DATE		LAND DATE	05/09/2025 MLU
INC DATE		AG DATE	

NASSAU COUNTY PROPERTY

PAGE 2 of 2 4

VALUATION SUMMARY

VALUATION BY		STANDARD
Tax Group: 4	Tax Dist:	
BUILDING MARKET VALUE		321,420
TOTAL MARKET OB/XF VALUE		5,134
TOTAL LAND VALUE - MARKET		60,000
TOTAL MARKET VALUE		386,554
SOH/AGL Deduction		34,186
ASSESSED VALUE		352,368
TOTAL EXEMPTION VALUE	HX HB	50,722
BASE TAXABLE VALUE		301,646
TOTAL JUST VALUE		386,554
NCON VALUE		3,851
INCOME VALUE		
PREVIOUS YEAR MKT VALUE		339,221

PERMIT NUM	DESCRIPTION	AMT	ISSUED
8903	MH MOVE-ON	33,000	05/19/1992

SALES DATA

OFF RECORD Number	DATE	TYPE INST	Q U /	V I /	RSN CD	SALE PRICE
2587/0075	8/26/2022	WD	Q	I	01	435,000
GRANTOR: NORTH EAST FLORIDA HO						
GRANTEE: THURMAN KENNITH E						
2546/0881	3/10/2022	WD	Q	I	01	312,000
GRANTOR: JONES MIRANDA M & KEN						
GRANTEE: NORTH EAST FLORIDA						

BUILDING NOTES

BUILDING DIMENSIONS

BAS=[YR=2016] W36 S24 E36 N24$.

EXTRA FEATURES

LN	OB/XF CODE	DESCRIPTION	BLD	CAP	L	W	UNITS	UT	Adj R	ADJ UNIT PRICE	ORIG COND	YEAR ON	YEAR ACTUAL	Q	% COND	OB/XF MKT VALUE	NOTES

LAND DESCRIPTION

TOTAL OB/XF 0

LN	USE CODE	CLS	LAND USE DESCRIPTION	CAP	RD	LOC ZONE	FRONT	DEPTH	TOT LND UTS	UNIT TYPE	DT	DPTH FACT	% COND	TOT ADJ	UNIT PRICE	ADJ UNIT PRICE	LAND VALUE	OTHER ADJUSTMENTS AND NOTES	YEAR	DENSITY	DECL	FRZ	YR	CONSRV

REVIEW DATE 02/14/2025 BY KW Total Acres: 0.00 Total Land Value: 60,000 Market: 0 Agricultural: 0 Common: 60,000 PRINTED 07/30/2025 BY SYS