LOT 65
SANDY RIDGE OR 2638/638

GUPTA BHUPENDRA & ALKA/
85161 SANDY RIDGE LOOP
YULEE, FL 32097

2025

42-2N-27-1095-0065-0000

NASSAU COUNTY PROPERTY

BUILDING CHARACTERISTICS

ELEMENT	CD	CONSTRUCTION
Exterior Wall	31	HARDIE BRD 100
Roof Structur	03	GABLE/HIP 100
Roof Cover	03	COMP SHNGL 100
Interior Wall	05	DRYWALL 100
Interior Floo	13	LVT/LAMNT 50
Interior Floo	14	CARPET 50
Air Condition	03	CENTRAL 100
Heating Type	04	AIR DUCTED 100
Bedrooms		4 100
Bathrooms		3 100
Frame	02	WOOD FRAME 100
Stories	2.	2. 100
Units		0 100
Quality	04	Quality Level 04
DOR CODE	0100	SINGLE FAMILY
MAP NUM		MKT AREA 04
NEIGHBORHOOD/LOC	4096.00	

AREA TYPE	TOTAL GROSS AREA	PCT OF BASE	YEAR	TOT ADJ AREA	SUBAREA MARKET VALUE
BAS	2,626	100	2024	2,626	361,626
FGR	555	55	2024	305	42,002
FOP	107	30	2024	32	4,407
FSP	200	40	2024	80	11,017
FST	16	55	2025	9	1,239
FUS	432	100	2024	432	59,491
STR	88	10	2024	9	1,239
TOTALS	4,024			3,493	481,021

MARKET ADJUSTMENTS

TYPE	MDL	EFF. AREA	TOT ADJ PTS	EFF. BASE RATE	REPL. COST NEW	AYB	EYB	ECON	FNCT		NORM	% COND
0900	01	3,493	104.3280	137.71	481,021	2024	2024	0	0	0	0.00	100.00

1 SNGL FAM – 0% - 2025 Heated Area: 3058 HX Base Yr

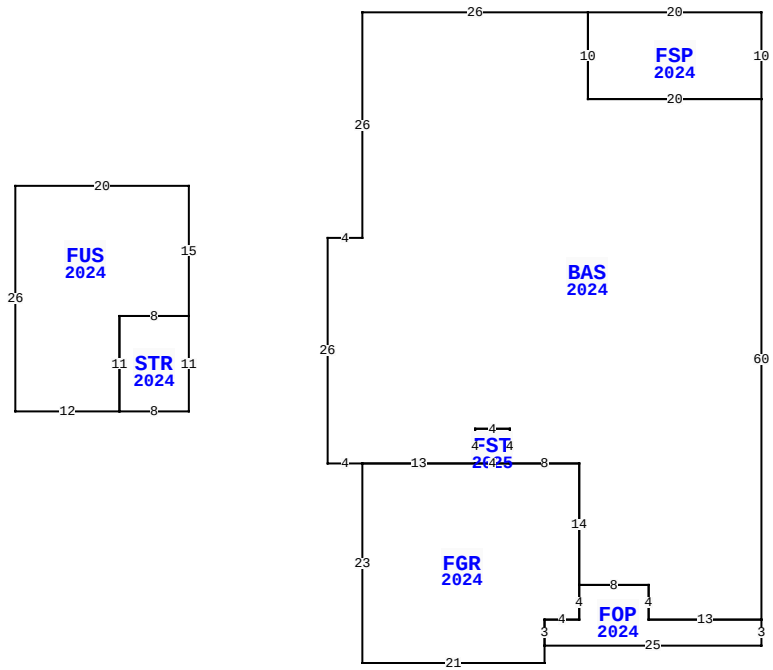

85161 SANDY RIDGE LOOP, YULEE

BLD DATE		LGL DATE	
XF DATE		LAND DATE	03/14/2024 MLU
INC DATE		AG DATE	

NASSAU COUNTY PROPERTY — VALUATION SUMMARY

VALUATION BY	STANDARD
Tax Group: 4	Tax Dist:
BUILDING MARKET VALUE	481,021
TOTAL MARKET OB/XF VALUE	7,300
TOTAL LAND VALUE - MARKET	55,000
TOTAL MARKET VALUE	543,321
SOH/AGL Deduction	0
ASSESSED VALUE	543,321
TOTAL EXEMPTION VALUE	0
BASE TAXABLE VALUE	543,321
TOTAL JUST VALUE	543,321
NCON VALUE	488,321
INCOME VALUE	
PREVIOUS YEAR MKT VALUE	55,000

PERMIT NUM	DESCRIPTION	AMT	ISSUED
230011080	H3075 G554 P320	490,336	08/29/2023
220005172			

SALES DATA

OFF RECORD Number	DATE	TYPE INST	Q / U	V / I	RSN CD	SALE PRICE
2790/119	5/21/2025	LE	U	I	11	100
GRANTOR: GUPTA BHUPENDRA & ALK						
GRANTEE: MAINI ANJULI						
2715/1906	6/03/2024	WD	Q	I	01	639,000
GRANTOR: SEDA CONSTRUCTION COM						
GRANTEE: GUPTA BHUPENDRA						

BUILDING NOTES

BUILDING DIMENSIONS

BAS=[YR=2024;ORIG=80,10] W20 N10 W26 S26 W4 S26 E4 E13 N4 E4 S4 E8 S14 E8 S4 E13 N60 $
FGR=[YR=2024;ORIG=34,52] E13 E4 E8 S14 S4 W4 S3 S2 W21 N23 $
FUS=[YR=2024;ORIG=-6,20] E20 S15 W8 S11 W12 N26 $
FSP=[YR=2024;ORIG=60,0] E20 S10 W20 N10 $
FOP=[YR=2024;ORIG=55,70] E4 N4 E8 S4 E13 S3 W25 N3 $
STR=[YR=2024;ORIG=6,35] E8 S11 W8 N11 $
FST=[YR=2025;ORIG=47,48] E4 S4 W4 N4 $
.

EXTRA FEATURES

LN	OB/XF CODE	DESCRIPTION	BLD	CAP	L	W	UNITS	UT	Adj R	ADJ UNIT PRICE	ORIG COND	YEAR ON	YEAR ACTUAL	Q	% COND	OB/XF MKT VALUE	NOTES
1	0855	CONC PAVER	0	0	0	0	730.00	SF	10.00	10.00	100	2025	2024		100	7,300	

LAND DESCRIPTION

TOTAL OB/XF 7,300

LN	USE CODE	CLS	LAND USE DESCRIPTION	CAP	RD	LOC ZONE	FRONT	DEPTH	TOT LND UTS	UNIT TYPE	DT	DPTH FACT	% COND	TOT ADJ	UNIT PRICE	ADJ UNIT PRICE	LAND VALUE	OTHER ADJUSTMENTS AND NOTES	YEAR	DENSITY	DECL	FRZ	YR	CONSRV
1	000134	C	RES POND	0		RSF-2	0.00	0.00	1.00	LT		1.00	1.00	1.00	55,000.00	55,000.00	55,000							

REVIEW DATE 01/17/2024 BY DJ Total Acres: 0.00 Total Land Value: 55,000 Market: 0 Agricultural: 0 Common: 55,000 PRINTED 07/30/2025 BY SYS