LOT 10D
NASSAU CROSSING TOWNHOMES PH 2
OR 2486/1754

WEISZ REAL ESTATE & MAINTENANCE INC
319 THE VILLAS WAY
KINGSLAND, GA 31548

2025

42-2N-27-1091-010D-0000

NASSAU COUNTY PROPERTY

BUILDING CHARACTERISTICS

ELEMENT	CD	CONSTRUCTION
Exterior Wall	31	HARDIE BRD 100
Roof Structur	03	GABLE/HIP 100
Roof Cover	03	COMP SHNGL 100
Interior Wall	05	DRYWALL 100
Interior Floo	11	CLAY TILE 60
Interior Floo	14	CARPET 40
Air Condition	03	CENTRAL 100
Heating Type	04	AIR DUCTED 100
Bedrooms		2 100
Bathrooms		2.5 100
Frame	02	WOOD FRAME 100
Stories	1.	1. 100
Units		1 100
Quality	03	Quality Level 03

DOR CODE 0100 SINGLE FAMILY
MAP NUM | MKT AREA 04
NEIGHBORHOOD/LOC 4092.00

AREA TYPE	TOTAL GROSS AREA	PCT OF BASE	YEAR	TOT ADJ AREA	SUBAREA MARKET VALUE
BAS	532	100	2023	532	66,835
FGR	280	55	2023	154	19,347
FOP	36	30	2023	11	1,382
FOP	72	30	2023	22	2,764
FUS	636	100	2023	636	79,901
STR	48	10	2023	5	628
TOTALS	1,604			1,360	170,857

MARKET ADJUSTMENTS

TYPE	MDL	EFF. AREA	TOT ADJ PTS	EFF. BASE RATE	REPL. COST NEW	AYB	EYB	ECON	FNCT		NORM	% COND
0320	01	1,360	125.6320	125.63	170,857	2023	2023	0	0	0	0.00	100.00

1 TOWNHOUSE - 0% - 2024 Heated Area: 1168 HX Base Yr

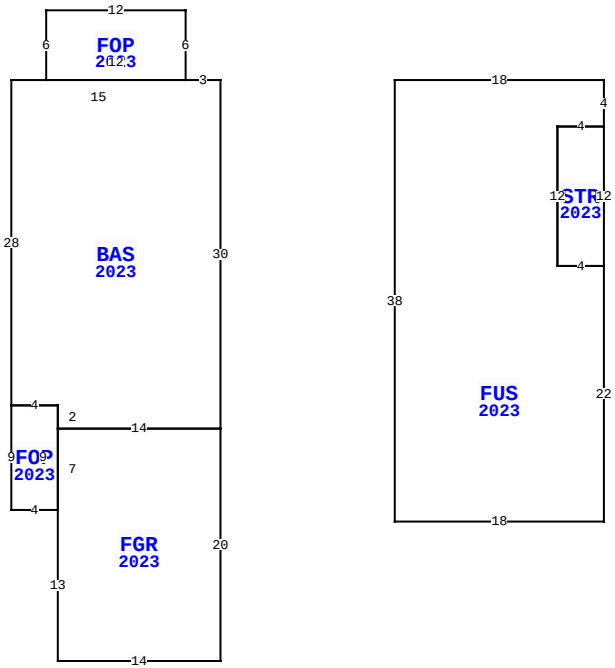

86424 SHORTLINE CIR, YULEE

BLD DATE		LGL DATE	
XF DATE		LAND DATE	04/30/2025 MLU
INC DATE		AG DATE	

VALUATION SUMMARY

VALUATION BY	STANDARD
Tax Group: 4	Tax Dist:
BUILDING MARKET VALUE	170,857
TOTAL MARKET OB/XF VALUE	2,184
TOTAL LAND VALUE - MARKET	50,000
TOTAL MARKET VALUE	223,041
SOH/AGL Deduction	0
ASSESSED VALUE	223,041
TOTAL EXEMPTION VALUE	0
BASE TAXABLE VALUE	223,041
TOTAL JUST VALUE	223,041
NCON VALUE	0
INCOME VALUE	
PREVIOUS YEAR MKT VALUE	204,500

PERMIT NUM	DESCRIPTION	AMT	ISSUED
23001256	CO ISSUED	0	01/30/2023
21009028	NEW CONSTR	168,846	09/01/2021

SALES DATA

OFF RECORD Number	DATE	TYPE INST	Q U	V I	RSN CD	SALE PRICE
2617/1259	1/31/2023	SW	Q	I	01	243,000
GRANTOR: D R HORTON INC-JACKSO						
GRANTEE: WEISZ REAL ESTATE &						
2495/0837	9/09/2021	WD	Q	V	05	448,000
GRANTOR: PATRIOT RIDGE LLP						
GRANTEE: D R HORTON INC-JACK						

BUILDING NOTES

BUILDING DIMENSIONS

BAS2023=W3 FOP2023=N6 W12 S6
E12$ W15 S28 FOP2023=S9 E4
FGR2023= S13 E14 N20 W14 S7$
N9 W4$ E4 S2 E14 N30$ PTR=E15
FUS2023=E18 S4 STR2023=S12 W4
N12 E4$ W4 S12 E4 S22 W18 N38$
W15$.

EXTRA FEATURES

LN	OB/XF CODE	DESCRIPTION	BLD	CAP	L	W	UNITS	UT	Adj R	ADJ UNIT PRICE	ORIG COND	YEAR ON	YEAR ACTUAL	Q	% COND	OB/XF MKT VALUE	NOTES
1	0810	CONCRETE A	1	0	0	0	336.00	SF	6.50	6.50	100	2024	2023		100	2,184	

LAND DESCRIPTION

TOTAL OB/XF 2,184

LN	USE CODE	CLS	LAND USE DESCRIPTION	CAP	RD	LOC ZONE	FRONT	DEPTH	TOT LND UTS	UNIT TYPE	DT	DPTH FACT	% COND	TOT ADJ	UNIT PRICE	ADJ UNIT PRICE	LAND VALUE	OTHER ADJUSTMENTS AND NOTES	YEAR	DENSITY	DECL	FRZ	YR	CONSRV
1	000100	C	RES	0		PUD	0.00	0.00	1.00	LT		1.00	1.00	1.00	50,000.00	50,000.00	50,000							

REVIEW DATE 12/15/2022 BY DSB Total Acres: 0.00 Total Land Value: 50,000 Market: 0 Agricultural: 0 Common: 50,000 PRINTED 07/30/2025 BY SYS