LOT 1E
NASSAU CROSSING TOWNHOMES PH 1
OR 2379/142

TAYLOR JUSTIN
86432 MAINLINE RD
YULEE, FL 32097

2025

42-2N-27-1091-001E-0000

NASSAU COUNTY PROPERTY

BUILDING CHARACTERISTICS

ELEMENT	CD	CONSTRUCTION
Exterior Wall	31	HARDIE BRD 100
Roof Structur	03	GABLE/HIP 100
Roof Cover	03	COMP SHNGL 100
Interior Wall	05	DRYWALL 100
Interior Floo	11	CLAY TILE 60
Interior Floo	14	CARPET 40
Air Condition	03	CENTRAL 100
Heating Type	04	AIR DUCTED 100
Bedrooms		2 100
Bathrooms		2.5 100
Frame	02	WOOD FRAME 100
Stories	2.	2. 100
Units		0 100
Occupancy	00	NONE 100
Quality	03	Quality Level 03
DOR CODE	0100	SINGLE FAMILY
MAP NUM		MKT AREA 04
NEIGHBORHOOD/LOC	4092.00	

AREA TYPE	TOTAL GROSS AREA	PCT OF BASE	YEAR	TOT ADJ AREA	SUBAREA MARKET VALUE
BAS	532	100	2021	532	66,167
FGR	280	55	2021	154	19,154
FOP	36	30	2021	11	1,368
FOP	72	30	2021	22	2,736
FUS	636	100	2021	636	79,102
STR	48	10	2021	5	622
TOTALS	1,604			1,360	169,148

MARKET ADJUSTMENTS

TYPE	MDL	EFF. AREA	TOT ADJ PTS	EFF. BASE RATE	REPL. COST NEW	AYB	EYB	ECON	FNCT		NORM	% COND
0320	01	1,360	125.6320	125.63	170,857	2021	2021	0	0	0	1.00	99.00

1 TOWNHOUSE - 100% - 2023 Heated Area: 1168 HX Base Yr 2023

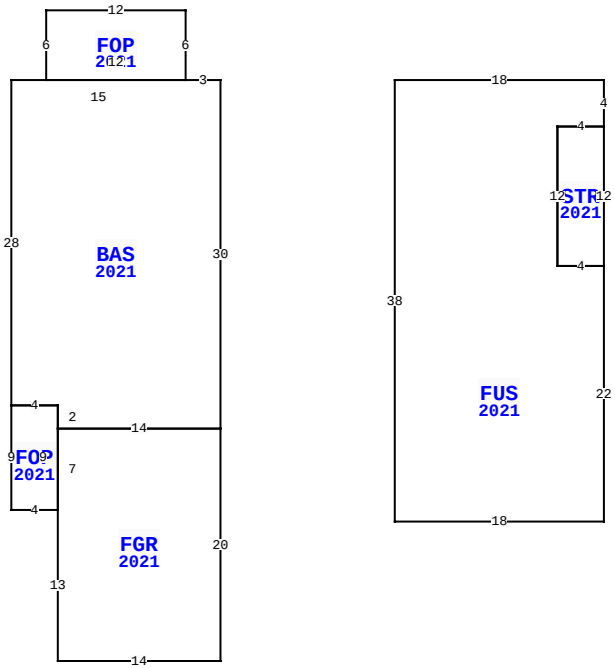

86432 MAINLINE RD, YULEE

BLD DATE	04/17/2023 NW	LGL DATE	
XF DATE		LAND DATE	04/30/2025 MLU
INC DATE		AG DATE	

VALUATION SUMMARY

VALUATION BY		STANDARD
Tax Group: 4	Tax Dist:	
BUILDING MARKET VALUE		169,148
TOTAL MARKET OB/XF VALUE		1,653
TOTAL LAND VALUE - MARKET		50,000
TOTAL MARKET VALUE		220,801
SOH/AGL Deduction		30,697
ASSESSED VALUE		190,104
TOTAL EXEMPTION VALUE	HX HB	50,722
BASE TAXABLE VALUE		139,382
TOTAL JUST VALUE		220,801
NCON VALUE		0
INCOME VALUE		
PREVIOUS YEAR MKT VALUE		203,157

PERMIT NUM	DESCRIPTION	AMT	ISSUED

SALES DATA

OFF RECORD Number	DATE	TYPE INST	Q U	V I	RSN CD	SALE PRICE
2554/1102	4/12/2022	WD	Q	I	01	243,000
GRANTOR: MOORE BETH E						
GRANTEE: TAYLOR JUSTIN						
2475/1769	6/25/2021	SW	Q	I	01	207,700
GRANTOR: D R HORTON INC-JACKSO						
GRANTEE: MOORE BETH E						

BUILDING NOTES

BUILDING DIMENSIONS

BAS=[YR=2021] W3 FOP=[YR=2021] N6 W12 S6 E12$ W15 S28
FOP=[YR=2021] S9 E4 FGR=[YR=2021] S13 E14 N20 W14 S7$ N9 W4$
E4 S2 E14 N30$ PTR=E15 FUS=[YR=2021] E18 S4 STR=[YR=2021] S12
W4 N12 E4$ W4 S12 E4 S22 W18 N38$ W15$.

EXTRA FEATURES

LN	OB/XF CODE	DESCRIPTION	BLD	CAP	L	W	UNITS	UT	Adj R	ADJ UNIT PRICE	ORIG COND	YEAR ON	YEAR ACTUAL	Q	% COND	OB/XF MKT VALUE	NOTES
1	0811	CONCRETE B	0	100	0	0	321.00	SF	5.20	5.20	100	2021	2021	3	99	1,653	

LAND DESCRIPTION

TOTAL OB/XF 1,653

LN	USE CODE	CLS	LAND USE DESCRIPTION	CAP	RD	LOC ZONE	FRONT	DEPTH	TOT LND UTS	UNIT TYPE	DT	DPTH FACT	% COND	TOT ADJ	UNIT PRICE	ADJ UNIT PRICE	LAND VALUE	OTHER ADJUSTMENTS AND NOTES	YEAR	DENSITY	DECL	FRZ	YR	CONSRV
1	000100	C	RES	100		PUD	0.00	0.00	1.00	LT		1.00	1.00	1.00	50,000.00	50,000.00	50,000							

REVIEW DATE 10/07/2021 BY JH Total Acres: 0.00 Total Land Value: 50,000 Market: 0 Agricultural: 0 Common: 50,000 PRINTED 07/30/2025 BY SYS