BLK 6 LOTS 1,2,3,4 & 5
ST MARYS HIGHLANDS PBK 5/12

JOHNSON DIANNE ROBERTS
3205 54TH DR E #109
BRADENTON, FL 34203

2025

41-4N-23-2100-0006-0030

NASSAU COUNTY PROPERTY

BUILDING CHARACTERISTICS

ELEMENT	CD	CONSTRUCTION
Exterior Wall	19	COMMON BRK 100
Roof Structur	03	GABLE/HIP 100
Roof Cover	03	COMP SHNGL 100
Interior Wall	05	DRYWALL 100
Interior Floo	13	LVT/LAMNT 90
Interior Floo	08	SHT VINYL 10
Air Condition	03	CENTRAL 100
Heating Type	04	AIR DUCTED 100
Bedrooms		3 100
Bathrooms		2 100
Frame	02	WOOD FRAME 100
Stories	1.	1. 100
Units		0 100
BUD8 Adjustme	04	DIST 01 100
Occupancy	00	NONE 100
Quality	03	Quality Level 03
DOR CODE	0100	SINGLE FAMILY
MAP NUM		MKT AREA 09
NEIGHBORHOOD/LOC	9004.00	

AREA TYPE	TOTAL GROSS AREA	PCT OF BASE	YEAR	TOT ADJ AREA	SUBAREA MARKET VALUE
BAS	1,314	100	1993	1,314	118,758
FCP	192	25	1993	48	4,338
FST	96	55	1993	53	4,790
PTO	198	5	1993	10	904
PTO	209	5	2011	10	904
TOTALS	2,009			1,435	129,694

MARKET ADJUSTMENTS

TYPE	MDL	EFF. AREA	TOT ADJ PTS	EFF. BASE RATE	REPL. COST NEW	AYB	EYB	ECON	FNCT		NORM	% COND
0100	01	1,435	132.9120	132.91	190,726	1968	1980	0	0	0	32.00	68.00

1 SINGLE FAM – 0% - 2024 Heated Area: 1314 HX Base Yr

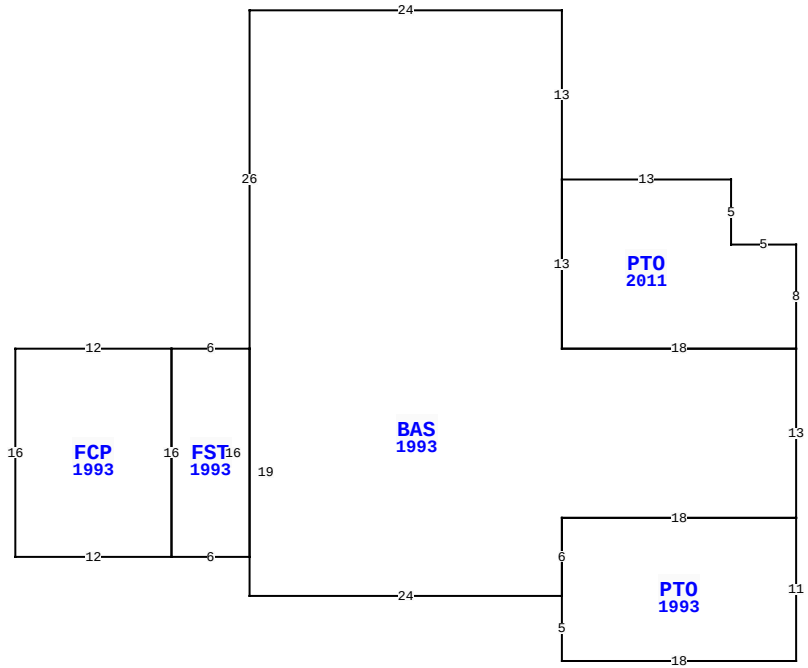

2951 ST MARYS CIR, HILLIARD

BLD DATE		LGL DATE	
XF DATE		LAND DATE	05/09/2025 MLU
INC DATE		AG DATE	

VALUATION SUMMARY

VALUATION BY	STANDARD
Tax Group: 4	Tax Dist:
BUILDING MARKET VALUE	129,694
TOTAL MARKET OB/XF VALUE	8,576
TOTAL LAND VALUE - MARKET	190,000
TOTAL MARKET VALUE	328,270
SOH/AGL Deduction	16,179
ASSESSED VALUE	312,091
TOTAL EXEMPTION VALUE	0
BASE TAXABLE VALUE	312,091
TOTAL JUST VALUE	328,270
NCON VALUE	0
INCOME VALUE	
PREVIOUS YEAR MKT VALUE	283,719

PERMIT NUM	DESCRIPTION	AMT	ISSUED

SALES DATA

OFF RECORD Number	DATE	TYPE INST	Q / U	V / I	RSN CD	SALE PRICE
2028/0988	2/16/2016	FJ	U	I	11	100
GRANTOR: ROBERTS ROY G III EST						
GRANTEE: JOHNSON DIANNE B FK						
2029/0426	2/12/2016	FJ	U	I	11	0
GRANTOR: ROBERTS ROY G III EST						
GRANTEE: JOHNSON DIANNE B						

BUILDING NOTES

BUILDING DIMENSIONS

PTO=[YR=2011] W5 N5 W13 BAS=[YR=1993] N13 W24 S26 FST=[YR=1993] W6 FCP=[YR=1993] W12 S16 E12 N16$ S16 E6 N16$ S19 E24 PTO=[YR=1993] S5 E18 N11 W18 S6$ N6 E18 N13 W18 N13$ S13 E18 N8 $.

EXTRA FEATURES

LN	OB/XF CODE	DESCRIPTION	BLD	CAP	L	W	UNITS	UT	Adj R	ADJ UNIT PRICE	ORIG COND	YEAR ON	YEAR ACTUAL	Q	% COND	OB/XF MKT VALUE	NOTES
1	0811	CONCRETE B	0	0	0	0	704.00	SF	5.20	5.20	100	1968	1968	3	20	732	
2	0810	CONCRETE A	0	0	24	20	480.00	SF	6.50	6.50	100	1987	1987	3	49.5	1,544	
3	0510	GARAGE WD-	0	0	45	20	900.00	SF	35.00	35.00	100	1995	1995	3	20	6,300	

LAND DESCRIPTION

TOTAL OB/XF 8,576

LN	USE CODE	CLS	LAND USE DESCRIPTION	CAP	RD	LOC ZONE	FRONT	DEPTH	TOT LND UTS	UNIT TYPE	DT	DPTH FACT	% COND	TOT ADJ	UNIT PRICE	ADJ UNIT PRICE	LAND VALUE	OTHER ADJUSTMENTS AND NOTES	YEAR	DENSITY	DECL	FRZ	YR	CONSRV
1	000100	C	RES	0	0005	OR	0.00	0.00	1.00	LT		1.00	1.00	1.00	38,000.00	38,000.00	38,000							
2	000100	C	RES	0	0005	OR	0.00	0.00	4.00	LT		1.00	1.00	1.00	38,000.00	38,000.00	152,000							

REVIEW DATE 10/16/2020 BY TWA Total Acres: 0.00 Total Land Value: 190,000 Market: 0 Agricultural: 0 Common: 190,000 PRINTED 07/30/2025 BY SYS