LOT 143
LIGHTHOUSE POINTE #2 PB 7/145

CLEAVER MARK A/SHERWOOD DORIS M
9109 LAKE IN THE WOODS TRL
CHAGRIN FALLS, OH 44023

**2025**

**41-3N-28-1250-0143-0000**

## NASSAU COUNTY PROPERTY



### BUILDING CHARACTERISTICS

| ELEMENT | CD | CONSTRUCTION |
|---|---|---|
| Exterior Wall | 31 | HARDIE BRD 100 |
| Roof Structur | 08 | IRREGULAR 100 |
| Roof Cover | 13 | STAND SEAM 100 |
| Interior Wall | 05 | DRYWALL 100 |
| Interior Floo | 13 | LVT/LAMNT 70 |
| Interior Floo | 19 | MARBLE 30 |
| Air Condition | 03 | CENTRAL 100 |
| Heating Type | 04 | AIR DUCTED 100 |
| Bedrooms | | 4 100 |
| Bathrooms | | 3.5 100 |
| Frame | 02 | WOOD FRAME 100 |
| Stories | 1. | 1. 100 |
| Units | | 0 100 |
| Quality | 05 | Quality Level 05 |
| DOR CODE | 0100 | SINGLE FAMILY |
| MAP NUM | | MKT AREA 04 |
| NEIGHBORHOOD/LOC | 4034.00 | |

| AREA TYPE | TOTAL GROSS AREA | PCT OF BASE | YEAR | TOT ADJ AREA | SUBAREA MARKET VALUE |
|---|---|---|---|---|---|
| BAS | 2,134 | 100 | 2025 | 2,134 | 444,299 |
| FGR | 624 | 55 | 2025 | 343 | 71,413 |
| FGR | 774 | 55 | 2025 | 426 | 88,693 |
| FOP | 60 | 30 | 2025 | 18 | 3,748 |
| FOP | 78 | 30 | 2025 | 23 | 4,789 |
| FOP | 396 | 30 | 2025 | 119 | 24,776 |
| FSP | 204 | 40 | 2025 | 82 | 17,072 |
| FUS | 814 | 100 | 2025 | 814 | 169,475 |
| STR | 76 | 10 | 2025 | 8 | 1,666 |
| TOTALS | 5,160 | | | 3,967 | 825,929 |

### MARKET ADJUSTMENTS

| TYPE | MDL | EFF. AREA | TOT ADJ PTS | EFF. BASE RATE | REPL. COST NEW | AYB | EYB | ECON | FNCT | | NORM | % COND |
|---|---|---|---|---|---|---|---|---|---|---|---|---|
| 0500 | 01 | 3,967 | 131.7690 | 208.20 | 825,929 | 2024 | 2024 | 0 | 0 | 0 | 0.00 | 100.00 |

1 SFR CUST – 0% - 2025 Heated Area: 2948 HX Base Yr

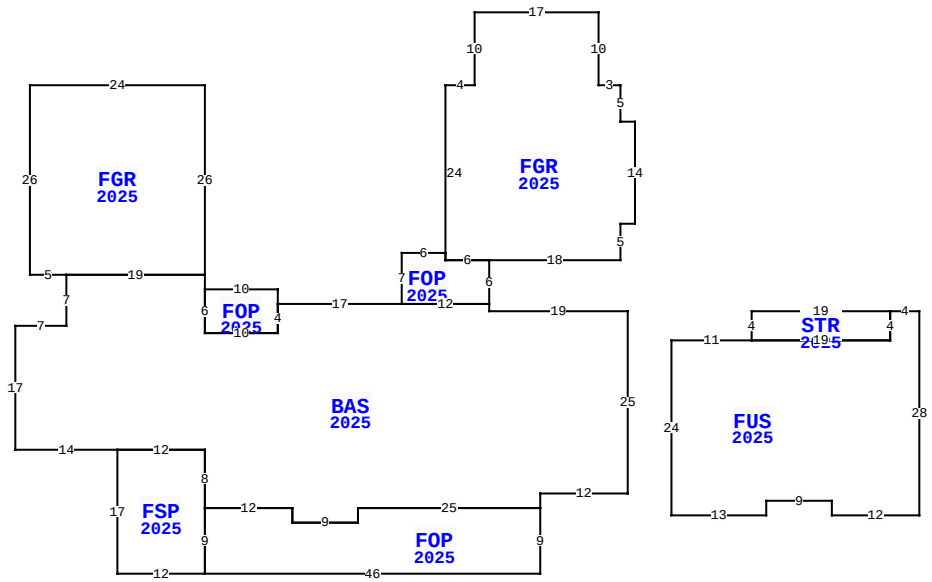


28872 VIEUX CARRE, YULEE

| | | | |
|---|---|---|---|
| BLD DATE | | LGL DATE | |
| XF DATE | | LAND DATE | 04/11/2025 MLU |
| INC DATE | | AG DATE | |

### VALUATION SUMMARY

| | |
|---|---|
| VALUATION BY | STANDARD |
| Tax Group: 4 | Tax Dist: |
| BUILDING MARKET VALUE | 825,929 |
| TOTAL MARKET OB/XF VALUE | 20,960 |
| TOTAL LAND VALUE - MARKET | 110,000 |
| TOTAL MARKET VALUE | 956,889 |
| SOH/AGL Deduction | 0 |
| ASSESSED VALUE | 956,889 |
| TOTAL EXEMPTION VALUE | 0 |
| BASE TAXABLE VALUE | 956,889 |
| TOTAL JUST VALUE | 956,889 |
| NCON VALUE | 846,889 |
| INCOME VALUE | |
| PREVIOUS YEAR MKT VALUE | 100,000 |

| PERMIT NUM | DESCRIPTION | AMT | ISSUED |
|---|---|---|---|
| 240012343 | CO | | 11/04/2024 |
| B230013972 | SFR 2933 G 1398 | 600,396 | 10/30/2023 |

### SALES DATA

| OFF RECORD Number | DATE | TYPE INST | Q / U | V / I | RSN CD | SALE PRICE |
|---|---|---|---|---|---|---|
| 2521/1484 | 12/15/2021 | WD | Q | V | 01 | 135,000 |
| GRANTOR: LIGHTHOUSE POINTE DEV | | | | | | |
| GRANTEE: CLEAVER MARK A & DO | | | | | | |
| 1938/1054 | 9/19/2014 | SW | U | I | 37 | 2,599,000 |
| GRANTOR: VRE ENGLEWOOD LLC | | | | | | |
| GRANTEE: LIGHTHOUSE POINTE D | | | | | | |

### BUILDING NOTES

### EXTRA FEATURES

| LN | OB/XF CODE | DESCRIPTION | BLD | CAP | L | W | UNITS | UT | Adj R | ADJ UNIT PRICE | ORIG COND | YEAR ON | YEAR ACTUAL | Q | % COND | OB/XF MKT VALUE | NOTES |
|---|---|---|---|---|---|---|---|---|---|---|---|---|---|---|---|---|---|
| 1 | 0855 | CONC PAVER | 0 | 0 | 0 | 0 | 1,571.00 | SF | 10.00 | 10.00 | 100 | 2025 | 2024 | | 100 | 15,710 | |
| 2 | 0874 | SAUNA/STM | 0 | 0 | 7 | 5 | 35.00 | UT | 150.00 | 150.00 | 100 | 2025 | 2024 | | 100 | 5,250 | |

### BUILDING DIMENSIONS

BAS=[YR=2025;ORIG=17,27] N7 E19 S2 S6 E10 N4 E17 E12 S1 E19 S25 W12 S2 W25 S2 W9 N2 W12 N8 W12 W14 N17 E7 $
FSP=[YR=2025;ORIG=36,44] W12 S17 E12 N9 N8 $
FOP=[YR=2025;ORIG=36,52] E12 S2 E9 N2 E25 S9 W46 N9 $
FOP=[YR=2025;ORIG=36,28] E10 N4 N2 W10 S6 $
FGR=[YR=2025;ORIG=36,20] W19 W5 N26 E24 S26 $
FOP=[YR=2025;ORIG=75,24] W12 N7 E6 S1 E6 S6 $
FGR=[YR=2025;ORIG=69,18] E6 E18 N5 E2 N14 W2 N5 W3 N10 W17 S10 W4 S24 $
FUS=[YR=2025;ORIG=100,29] E11 E19 N4 E4 S28 W12 N2 W9 S2 W13 N24 $
STR=[YR=2025;ORIG=130,29] W19 N4 E19 S4 $

### LAND DESCRIPTION

TOTAL OB/XF 20,960

| LN | USE CODE | CLS | LAND USE DESCRIPTION | CAP | RD | LOC ZONE | FRONT | DEPTH | TOT LND UTS | UNIT TYPE | DT | DPTH FACT | % COND | TOT ADJ | UNIT PRICE | ADJ UNIT PRICE | LAND VALUE | OTHER ADJUSTMENTS AND NOTES | YEAR | DENSITY | DECL | FRZ | YR | CONSRV |
|---|---|---|---|---|---|---|---|---|---|---|---|---|---|---|---|---|---|---|---|---|---|---|---|---|
| 1 | 000100 | C | RES | 0 | | PUD | 0.00 | 0.00 | 1.00 | LT | | 1.00 | 1.00 | 1.00 | 110,000.00 | 110,000.00 | 110,000 | | | | | | | |

REVIEW DATE 01/14/2025 BY TWA Total Acres: 0.00 Total Land Value: 110,000 Market: 0 Agricultural: 0 Common: 110,000 PRINTED 07/30/2025 BY SYS