LOT 141
LIGHTHOUSE POINTE #2 PB 7/145

EQUERME ROGER P & MIGNON K
28698 VIEUX CARRE
YULEE, FL 32097

**2025**

**41-3N-28-1250-0141-0000**

## NASSAU COUNTY PROPERTY



### BUILDING CHARACTERISTICS

| ELEMENT | CD | CONSTRUCTION |
|---|---|---|
| Exterior Wall | 31 | HARDIE BRD 100 |
| Roof Structur | 08 | IRREGULAR 100 |
| Roof Cover | 14 | STAND SEAM 100 |
| Interior Wall | 05 | DRYWALL 100 |
| Interior Floo | 12 | HARDWOOD 90 |
| Interior Floo | 11 | CLAY TILE 10 |
| Air Condition | 03 | CENTRAL 100 |
| Heating Type | 04 | AIR DUCTED 100 |
| Bedrooms | | 3 100 |
| Bathrooms | | 2.5 100 |
| Frame | 02 | WOOD FRAME 100 |
| Stories | 2. | 2. 100 |
| Quality | 05 | Quality Level 05 |
| DOR CODE | 0100 | SINGLE FAMILY |
| MAP NUM | | MKT AREA 04 |
| NEIGHBORHOOD/LOC | 4034.00 | |

| AREA TYPE | TOTAL GROSS AREA | PCT OF BASE | YEAR | TOT ADJ AREA | SUBAREA MARKET VALUE |
|---|---|---|---|---|---|
| BAS | 2,119 | 100 | 2022 | 2,119 | 367,244 |
| FGR | 1,061 | 55 | 2022 | 584 | 101,213 |
| FOP | 774 | 30 | 2022 | 232 | 40,208 |
| FSP | 214 | 40 | 2022 | 86 | 14,905 |
| FUS | 792 | 100 | 2022 | 792 | 137,262 |
| STR | 68 | 10 | 2022 | 7 | 1,213 |
| UST | 72 | 45 | 2022 | 32 | 5,546 |
| TOTALS | 5,100 | | | 3,852 | 667,590 |

### MARKET ADJUSTMENTS

| TYPE | MDL | EFF. AREA | TOT ADJ PTS | EFF. BASE RATE | REPL. COST NEW | AYB | EYB | ECON | FNCT | | NORM | % COND |
|---|---|---|---|---|---|---|---|---|---|---|---|---|
| 0500 | 01 | 3,852 | 109.6920 | 173.31 | 667,590 | 2023 | 2023 | 0 | 0 | 0 | 0.00 | 100.00 |

1 SFR CUST – 100% - 2024 Heated Area: 2911 HX Base Yr 2024

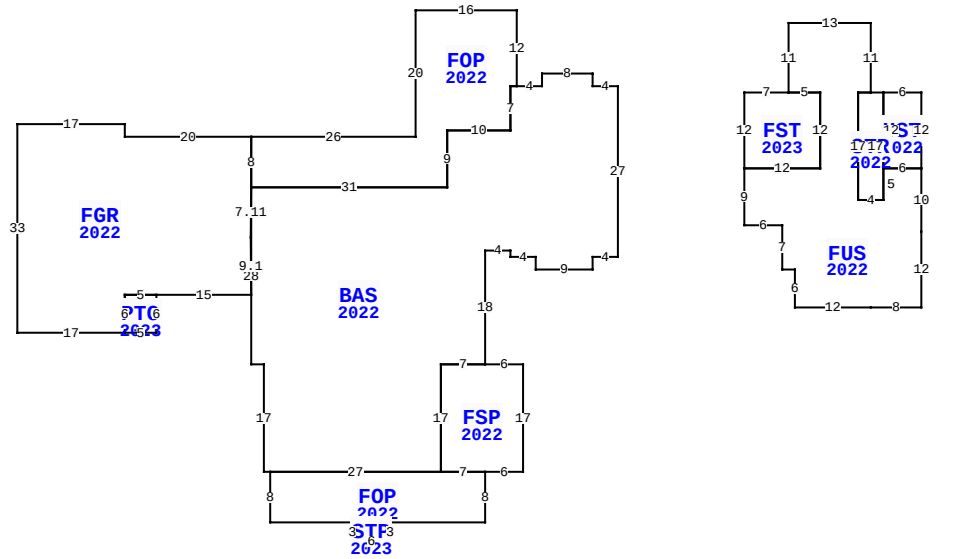


28698 VIEUX CARRE, YULEE

| | | | |
|---|---|---|---|
| BLD DATE | | LGL DATE | |
| XF DATE | | LAND DATE | 04/15/2024 MLU |
| INC DATE | | AG DATE | |

### NASSAU COUNTY PROPERTY — VALUATION SUMMARY

| | | |
|---|---|---|
| VALUATION BY | | STANDARD |
| Tax Group: 4 | Tax Dist: | |
| BUILDING MARKET VALUE | | 667,590 |
| TOTAL MARKET OB/XF VALUE | | 31,466 |
| TOTAL LAND VALUE - MARKET | | 100,000 |
| TOTAL MARKET VALUE | | 799,056 |
| SOH/AGL Deduction | | 59,704 |
| ASSESSED VALUE | | 739,352 |
| TOTAL EXEMPTION VALUE | HX HB | 50,722 |
| BASE TAXABLE VALUE | | 688,630 |
| TOTAL JUST VALUE | | 799,056 |
| NCON VALUE | | 0 |
| INCOME VALUE | | |
| PREVIOUS YEAR MKT VALUE | | 765,274 |

| PERMIT NUM | DESCRIPTION | AMT | ISSUED |
|---|---|---|---|
| CO230009196 | CO | | 07/19/2023 |
| 21017069 | NEW CONSTR | 594,917 | 12/09/2021 |

### SALES DATA

| OFF RECORD Number | DATE | TYPE INST | Q / U | V / I | RSN CD | SALE PRICE |
|---|---|---|---|---|---|---|
| 2465/1466 | 5/06/2021 | WD | Q | V | 02 | 130,000 |
| GRANTOR: ASHTON DUB & SANDRA K | | | | | | |
| GRANTEE: EQUERME ROGER P & M | | | | | | |
| 2083/1653 | 11/15/2016 | WD | Q | I | 01 | 120,000 |
| GRANTOR: LIGHTHOUSE POINTE DEV | | | | | | |
| GRANTEE: ASHTON DUB & SANDRA | | | | | | |

### BUILDING NOTES

### EXTRA FEATURES

| LN | OB/XF CODE | DESCRIPTION | BLD | CAP | L | W | UNITS | UT | Adj R | ADJ UNIT PRICE | ORIG COND | YEAR ON | YEAR ACTUAL | Q | % COND | OB/XF MKT VALUE | NOTES |
|---|---|---|---|---|---|---|---|---|---|---|---|---|---|---|---|---|---|
| 1 | 0501 | FP-AVERAGE | 0 | 100 | 0 | 0 | 1.00 | UT | 5,000.00 | 5,000.00 | 100 | 2024 | 2023 | | 100 | 5,000 | |
| 2 | 0855 | CONC PAVER | 0 | 100 | 0 | 0 | 957.00 | SF | 10.00 | 10.00 | 100 | 2024 | 2023 | | 100 | 9,570 | |
| 3 | 0810 | CONCRETE A | 0 | 100 | 0 | 0 | 24.00 | SF | 6.50 | 6.50 | 100 | 2024 | 2023 | | 100 | 156 | |
| 4 | 0479 | VF PICKET | 0 | 100 | 0 | 0 | 114.00 | LF | 10.00 | 10.00 | 100 | 2024 | 2023 | | 100 | 1,140 | |
| 5 | 0470 | VNYL GATE | 0 | 100 | 0 | 0 | 2.00 | UT | 300.00 | 300.00 | 100 | 2024 | 2023 | | 100 | 600 | |
| 6 | 0600 | SUMMER KIT | 0 | 100 | 0 | 0 | 1.00 | UT | 5,000.00 | 5,000.00 | 100 | 2024 | 2023 | | 100 | 5,000 | |
| 7 | 0502 | FP-CUSTOM | 0 | 100 | 0 | 0 | 1.00 | UT | 10,000.00 | 10,000.00 | 100 | 2024 | 2023 | | 100 | 10,000 | |

### BUILDING DIMENSIONS

BAS=[YR=2022;ORIG=0,-1] W4 N2 W8 S2 W4 W1 S7 W10 S9 W31 S28 E2 S17 E1 E27 N17 E7 N18 E4 S1 E4 S2 E9 N2 E4 N27 $
FGR=[YR=2022;ORIG=-58,15] N8 W20 N2 W17 S33 E17 N6 E5 E15 U9.1L0.1 U7.11R0.1 $
FUS=[YR=2022;ORIG=20,12] E12 N12 W5 N11 E13 S11 W2 S17 E4 N5 E6 S10 S12 W8 W12 N6 W2 N7 W6 N9 $
FOP=[YR=2022;ORIG=-16,-1] N12 W16 S20 W26 S8 E31 N9 E10 N7 E1 $
FOP=[YR=2022;ORIG=-55,60] S8 E34 N8 W7 W27 $
FSP=[YR=2022;ORIG=-21,60] E6 N17 W6 W7 S17 E7 $
UST=[YR=2022;ORIG=42,0] E6 S12 W6 N12 $
STR=[YR=2022;ORIG=40,0] E2 S17 W4 N17 E2 $

### LAND DESCRIPTION

TOTAL OB/XF 31,466

| LN | USE CODE | CLS | LAND USE DESCRIPTION | CAP | RD | LOC ZONE | FRONT | DEPTH | TOT LND UTS | UNIT TYPE | DT | DPTH FACT | % COND | TOT ADJ | UNIT PRICE | ADJ UNIT PRICE | LAND VALUE | OTHER ADJUSTMENTS AND NOTES | YEAR | DENSITY | DECL | FRZ | YR | CONSRV |
|---|---|---|---|---|---|---|---|---|---|---|---|---|---|---|---|---|---|---|---|---|---|---|---|---|
| 1 | 000134 | C | RES POND | 100 | | PUD | 0.00 | 0.00 | 1.00 | LT | | 1.00 | 1.00 | 1.00 | 100,000.00 | 100,000.00 | 100,000 | | | | | | | |

REVIEW DATE 07/10/2023 BY DJ Total Acres: 0.00 Total Land Value: 100,000 Market: 0 Agricultural: 0 Common: 100,000 PRINTED 07/30/2025 BY SYS