LOT 1
IN OR 1638/352
VILLAGES OF WOODBRIDGE #2

MORALES JOSE E JR
95065 SALINAS COURT
FERNANDINA BEACH, FL 32034

2025

40-2N-28-225V-0002-0010

NASSAU COUNTY PROPERTY

BUILDING CHARACTERISTICS

ELEMENT	CD	CONSTRUCTION
Exterior Wall	30	VINYL 80
Exterior Wall	16	WD FR STUC 20
Roof Structur	03	GABLE/HIP 100
Roof Cover	03	COMP SHNGL 100
Interior Wall	05	DRYWALL 100
Interior Floo	14	CARPET 60
Interior Floo	11	CLAY TILE 40
Air Condition	03	CENTRAL 100
Heating Type	04	AIR DUCTED 100
Bedrooms		3 100
Bathrooms		2 100
Frame	02	WOOD FRAME 100
Stories	1.	1. 100
Units		0 100
Occupancy	00	NONE 100
Quality	05	Quality Level 05

DOR CODE	0100	SINGLE FAMILY	
MAP NUM		MKT AREA	04
NEIGHBORHOOD/LOC	4068.00		

AREA TYPE	TOTAL GROSS AREA	PCT OF BASE	YEAR	TOT ADJ AREA	SUBAREA MARKET VALUE
BAS	1,658	100	2009	1,658	185,635
FGR	530	55	2009	292	32,693
FOP	48	30	2009	14	1,567
PTO	80	5	2009	4	448
TOTALS	2,316			1,968	220,343

MARKET ADJUSTMENTS

TYPE	MDL	EFF. AREA	TOT ADJ PTS	EFF. BASE RATE	REPL. COST NEW	AYB	EYB	ECON	FNCT		NORM	% COND
0100	01	1,968	120.5204	120.52	237,183	2009	2009	0	0	0	7.10	92.90

1 SINGLE FAM – 0% - 0 Heated Area: 1658 HX Base Yr

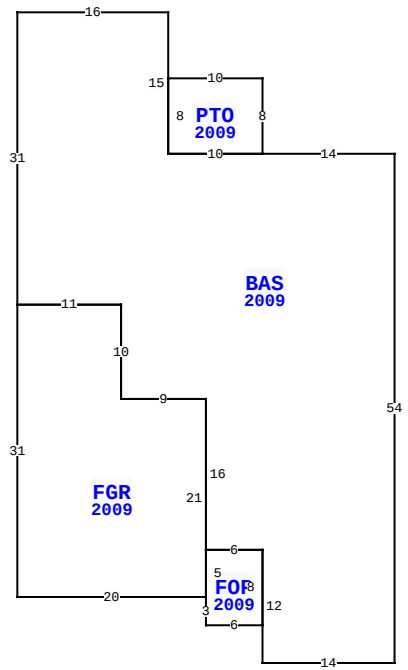

95065 SALINAS CT, FERNANDINA BEACH

BLD DATE		LGL DATE	
XF DATE		LAND DATE	04/25/2025 MLU
INC DATE		AG DATE	

VALUATION SUMMARY

VALUATION BY	STANDARD
Tax Group: 4	Tax Dist:
BUILDING MARKET VALUE	220,343
TOTAL MARKET OB/XF VALUE	8,476
TOTAL LAND VALUE - MARKET	85,000
TOTAL MARKET VALUE	313,819
SOH/AGL Deduction	32,830
ASSESSED VALUE	280,989
TOTAL EXEMPTION VALUE	0
BASE TAXABLE VALUE	280,989
TOTAL JUST VALUE	313,819
NCON VALUE	0
INCOME VALUE	
PREVIOUS YEAR MKT VALUE	294,078

PERMIT NUM	DESCRIPTION	AMT	ISSUED
C22450	CO ISSUED	0	07/31/2009
M14592	MECH OTHER	0	06/01/2009
B22450	NEW CONSTR	162,105	05/01/2009
P13766	PLUMBING	0	05/01/2009
R11866	REPAIR/RRF	1,500	05/01/2009
B21728	NEW CONSTR	196,050	07/01/2008

SALES DATA

OFF RECORD Number	DATE	TYPE INST	Q / U	V / I	RSN CD	SALE PRICE
1638/0352	8/27/2009	WD	Q	I	01	164,100
GRANTOR: RICHMOND AMERICAN HOM						
GRANTEE: MORALES JOSE E JR						
1361/0587	10/24/2005	WD	U	V	19	5,610,000
GRANTOR: WOODBRIDGE NASSAU JOI						
GRANTEE: RICHMOND AMERICAN H						

BUILDING NOTES

BUILDING DIMENSIONS

BAS=[YR=2009] W14 PTO=[YR=2009] N8 W10 S8 E10 $ W10 N15 W16 S31 FGR=[YR=2009] S31 E20 FOP=[YR=2009] S3 E6 N8 W6 S5 $ N21 W9N10 W11$ E11 S10 E9 S16 E6 S12 E14 N54 $.

EXTRA FEATURES

LN	OB/XF CODE	DESCRIPTION	BLD	CAP	L	W	UNITS	UT	Adj R	ADJ UNIT PRICE	ORIG COND	YEAR ON	YEAR ACTUAL	Q	% COND	OB/XF MKT VALUE	NOTES
1	0811	CONCRETE B	0	0	0	0	696.00	SF	5.20	5.20	100	2009	2009	3	89	3,221	
2	0476	VF 6 SBPL	0	0	0	0	170.00	LF	32.00	32.00	100	2015	2015	3	87	4,733	
3	0470	VNYL GATE	0	0	0	0	2.00	UT	300.00	300.00	100	2015	2015	3	87	522	

LAND DESCRIPTION

TOTAL OB/XF 8,476

LN	USE CODE	CLS	LAND USE DESCRIPTION	CAP	RD	LOC ZONE	FRONT	DEPTH	TOT LND UTS	UNIT TYPE	DT	DPTH FACT	% COND	TOT ADJ	UNIT PRICE	ADJ UNIT PRICE	LAND VALUE	OTHER ADJUSTMENTS AND NOTES	YEAR	DENSITY	DECL	FRZ	YR	CONSRV
1	000100	C	RES	0	0003	PUD	0.00	0.00	1.00	LT		1.00	1.00	1.00	85,000.00	85,000.00	85,000							

REVIEW DATE 06/07/2022 BY KW Total Acres: 0.00 Total Land Value: 85,000 Market: 0 Agricultural: 0 Common: 85,000 PRINTED 07/30/2025 BY SYS