IN OR 1633/1018
PARCELS 25 & 26
EX 25-1

J H E HOLDINGS INC/
474431 SR 200
FERNANDINA BEACH, FL 32034

2025

40-2N-28-0000-0025-0000

BUILDING CHARACTERISTICS

ELEMENT	CD	CONSTRUCTION
Exterior Wall	10	ABOVE AVG 60
Exterior Wall	17	CB STUCCO 40
Roof Structur	10	STEEL FRME 100
Roof Cover	04	BUILT-UP 100
Interior Wall	01	MINIMUM 100
Interior Floo	03	CONC FINSH 100
Ceiling	04	NONE 100
Air Condition	03	CENTRAL 100
Heating Type	01	NONE 100
Plumbing		6 100
Frame	05	STEEL 100
Story Height		11 100
RMS		597 100
Stories	3.	3. 100
Class	00	. 100
Units		0 100
Occupancy	00	NONE 100
Quality	05	Quality Level 05
DOR CODE	4840	MINI STORAGE
MAP NUM		MKT AREA 04
NEIGHBORHOOD/LOC	4002.00	

AREA TYPE	TOTAL GROSS AREA	PCT OF BASE	YEAR	TOT ADJ AREA	SUBAREA MARKET VALUE
BAS	24,957	100	2008	24,957	1,621,766
FEP	81	80	2008	65	4,224
FST	99	70	2008	69	4,484
FST	99	70	2008	69	4,484
FST	108	70	2008	76	4,938
FST	108	70	2008	76	4,938
FST	150	70	2008	105	6,823
FST	165	70	2008	116	7,538
FST	200	70	2008	140	9,097
FST	200	70	2008	140	9,097
TOTALS	96,600			95,786	6,224,404

MARKET ADJUSTMENTS

TYPE	MDL	EFF. AREA	TOT ADJ PTS	EFF. BASE RATE	REPL. COST NEW	AYB	EYB	ECON	FNCT		NORM	% COND
4814	06	95,786	120.8693	77.36	7,410,005	2008	2008	0	0	0	16.00	84.00

3 MINI MULTI - 0% - 0 Heated Area: 93360 HX Base Yr

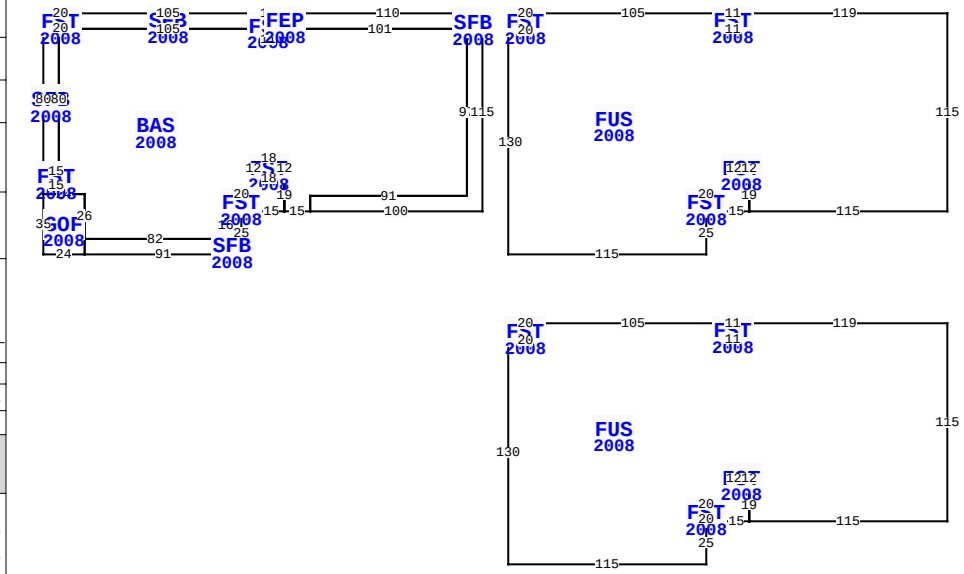

** This building has 22 Sub-Areas

474431 SR 200, FERNANDINA BEACH

BLD DATE		LGL DATE	
XF DATE		LAND DATE	04/25/2025 DC
INC DATE		AG DATE	

NASSAU COUNTY PROPERTY

PAGE 1 of 3 4

VALUATION SUMMARY

VALUATION BY	DIRECT_CAP
Tax Group: 4	Tax Dist:
BUILDING MARKET VALUE	8,775,112
TOTAL MARKET OB/XF VALUE	0
TOTAL LAND VALUE - MARKET	0
TOTAL MARKET VALUE	8,775,112
SOH/AGL Deduction	2,870,967
ASSESSED VALUE	5,904,145
TOTAL EXEMPTION VALUE	0
BASE TAXABLE VALUE	5,904,145
TOTAL JUST VALUE	8,775,112
NCON VALUE	0
INCOME VALUE	8,775,112
PREVIOUS YEAR MKT VALUE	6,924,429

BRIDGEVIEW MINI STORAGE

PERMIT NUM	DESCRIPTION	AMT	ISSUED
E20957	ELEC OTHER	200	06/01/2008
M13578	MECH OTHER	0	01/01/2008
B0720824	STORAGE BLDG	0	12/01/2007
B20825	NEW CONSTR	0	12/01/2007
C20824	CO ISSUED	0	12/01/2007
C20825	CO ISSUED	0	12/01/2007

SALES DATA

OFF RECORD Number	DATE	TYPE INST	Q / U	V / I	RSN CD	SALE PRICE
1633/1018	7/27/2009	QC	U	I	11	100
GRANTOR: BOB'S IRRIGATION & LA						
GRANTEE: J H E HOLDINGS INC						
1499/1924	5/18/2007	QC	Q	I	06	100
GRANTOR: BOB'S IRRIGATION & LA						
GRANTEE: J H E HOLDINGS INC						

BUILDING NOTES

BUILDING DIMENSIONS

FUS=[YR=2008;ORIG=35,0] E105 S9 E11 N9 E119 S115 W115 N19 N12 W9 S12 E9 S19 W15 N10 W20 S10 E10 S25 W115 N130 E20 N10 $
FUS=[YR=2008;ORIG=35,180] E105 S9 E11 N9 E119 S115 W115 N19 N12 W9 S12 E9 S19 W15 N10 W20 S10 E10 S25 W115 N130 E20 N10 $
BAS=[YR=2008;ORIG=-255,100] S5 E24 S26 E82 N16 W1 N10 E20 S10 E15 N19 W18 N12 E18 S12 S19 E15 N9 E91 N97 W101 W9 S6 W11 N6 W105 S1 W11 S80 E6 S10 W15 $
SFB=[YR=2008;ORIG=0,0] W110 S9 E101 S97 W91 S9 E100 N115 $
SFB=[YR=2008;ORIG=-231,140] E91 N25 W9 S16 W82 S9 $
SFB=[YR=2008;ORIG=-130,0] W105 S9 E105 N9 $
GOF=[YR=2008;ORIG=-255,105] S35 E24 N9 N26 W24 $
SFB=[YR=2008;ORIG=-255,10] S80 E9 N80 W9 $

EXTRA FEATURES

LN	OB/XF CODE	DESCRIPTION	BLD	CAP	L	W	UNITS	UT	Adj R	ADJ UNIT PRICE	ORIG COND	YEAR ON	YEAR ACTUAL	Q	% COND	OB/XF MKT VALUE	NOTES
1	0812	CONCRETE C	0	0	0	0	39,969.00	SF	4.00	4.00	100	2008	2008	3	88	140,691	
2	4950	BOLLARD	0	0	0	0	47.00	UT	100.00	100.00	100	2008	2008	3	100	4,700	
3	0462	ST/AL FNC	0	0	447	0	2,682.00	SF	10.00	10.00	100	2008	2008	3	48	12,874	
4	0092	AUTO GATE	0	0	0	24	1.00	UT	5,250.00	5,250.00	100	2008	2008	3	31	1,628	
5	0092	AUTO GATE	0	0	0	14	1.00	UT	3,500.00	3,500.00	100	2008	2008	3	31	1,085	
6	0978	SECURTY LT	0	0	0	0	39.00	UT	450.00	450.00	100	2008	2008	3	72	12,636	
7	0097	AWNING CN	0	0	9	4	13.00	SF	65.00	65.00	100	2008	2008	3	48	406	
8	0097	AWNING CN	0	0	20	4	24.00	SF	65.00	65.00	100	2008	2008	3	48	749	
9	0097	AWNING CN	0	0	15	4	19.00	SF	65.00	65.00	100	2008	2008	3	48	593	
10	0402	CONC BUMPE	0	0	0	0	3.00	UT	25.00	25.00	100	2008	2008	3	91	68	

TOTAL OB/XF 175,430

LAND DESCRIPTION

LN	USE CODE	CLS	LAND USE DESCRIPTION	CAP	RD	LOC ZONE	FRONT	DEPTH	TOT LND UTS	UNIT TYPE	DT	DPTH FACT	% COND	TOT ADJ	UNIT PRICE	ADJ UNIT PRICE	LAND VALUE	OTHER ADJUSTMENTS AND NOTES	YEAR	DENSITY	DECL	FRZ	YR	CONSRV
1	004800	C	WAREHOUSE	0	0004	CG	0.00	0.00	115,400.00	SF		1.00	1.00	1.00	12.00	12.00	1,384,800							

REVIEW DATE 04/18/2024 BY KWA Total Acres: 0.00 Total Land Value: 0 Market: 0 Agricultural: 0 Common: 0 PRINTED 07/30/2025 BY SYS

IN OR 1633/1018
PARCELS 25 & 26
EX 25-1

J H E HOLDINGS INC/
474431 SR 200
FERNANDINA BEACH, FL 32034

2025

40-2N-28-0000-0025-0000

NASSAU COUNTY PROPERTY

BUILDING CHARACTERISTICS

ELEMENT	CD	CONSTRUCTION
Exterior Wall	15	CONC BLOCK 100
Roof Structur	09	RIDGE FRME 100
Roof Cover	04	BUILT-UP 100
Interior Wall	01	MINIMUM 100
Interior Floo	03	CONC FINSH 100
Ceiling	04	NONE 100
Air Condition	01	NONE 100
Heating Type	01	NONE 100
Plumbing		0 100
Frame	03	MASONRY 100
Story Height		10 100
RMS		32 100
Stories	1.	1. 100
Class	00	. 100
Units		0 100
Occupancy	00	NONE 100
Quality	05	Quality Level 05

DOR CODE	4840	MINI STORAGE	
MAP NUM		MKT AREA	04
NEIGHBORHOOD/LOC	4002.00		

AREA TYPE	TOTAL GROSS AREA	PCT OF BASE	YEAR	TOT ADJ AREA	SUBAREA MARKET VALUE
BAS	7,650	100	2008	7,650	258,631
TOTALS	7,650			7,650	258,631

MARKET ADJUSTMENTS

TYPE	MDL	EFF. AREA	TOT ADJ PTS	EFF. BASE RATE	REPL. COST NEW	AYB	EYB	ECON	FNCT		NORM	% COND
4804	06	7,650	108.3466	42.26	323,289	2008	2008	0	0	0	20.00	80.00

4 MINI WAREH – 0% - 0 Heated Area: 7650 HX Base Yr

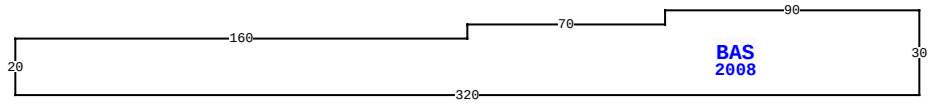

474431 SR 200, FERNANDINA BEACH

BLD DATE		LGL DATE	
XF DATE		LAND DATE	04/25/2025 DC
INC DATE		AG DATE	

EXTRA FEATURES

LN	OB/XF CODE	DESCRIPTION	BLD	CAP	L	W	UNITS	UT	Adj R	ADJ UNIT PRICE	ORIG COND	YEAR ON	YEAR ACTUAL	Q	% COND	OB/XF MKT VALUE	NOTES
11	1126	CB/STC 8"	0	0	9	4	36.00	SF	8.00	8.00	100	2008	2008	3	88	253	
12	7000	SIGN	0	0	0	0	1.00	SF	4,000.00	4,000.00	100	2008	2008	3	31	1,240	
13	7000	SIGN	0	0	0	0	1.00	SF	1,500.00	1,500.00	100	2008	2008	3	31	465	
14	0422	CL FNC 4'	0	0	48	0	48.00	LF	15.00	15.00	100	2008	2008	3	72	518	
15	0430	CL FNC 6B	0	0	659	0	659.00	LF	9.70	9.70	100	2008	2008	3	72	4,602	
16	0463	FENCE GATE	0	0	0	0	2.00	UT	300.00	300.00	100	2008	2008	3	72	432	
17	0463	FENCE GATE	0	0	0	0	2.00	UT	300.00	300.00	100	2008	2008	3	72	432	
18	0963	FIRE HYDR	0	0	0	0	1.00	UT	1,500.00	1,500.00	100	2008	2008	3	100	1,500	
19	0410	ELEVATOR	0	0	0	0	2.00	UT	45,000.00	45,000.00	100	2008	2008	3	100	90,000	
20	0966	FIRE SPRNK	0	0	0	0	95,287.00	SF	3.00	3.00	100	2008	2008	3	88	251,558	

VALUATION SUMMARY

VALUATION BY	DIRECT_CAP
Tax Group: 4	Tax Dist:
BUILDING MARKET VALUE	8,775,112
TOTAL MARKET OB/XF VALUE	0
TOTAL LAND VALUE - MARKET	0
TOTAL MARKET VALUE	8,775,112
SOH/AGL Deduction	2,870,967
ASSESSED VALUE	5,904,145
TOTAL EXEMPTION VALUE	0
BASE TAXABLE VALUE	5,904,145
TOTAL JUST VALUE	8,775,112
NCON VALUE	0
INCOME VALUE	8,775,112
PREVIOUS YEAR MKT VALUE	6,924,429

PERMIT NUM	DESCRIPTION	AMT	ISSUED
R10901	REPAIR/RRF	3,000	12/01/2007
R10902	REPAIR/RRF	6,000	12/01/2007
P12802	OTHER	0	10/01/2007
B0720489	STORAGE BLDG	0	01/01/2007
C0720489	CO ISSUED	0	01/01/2007
S010208	SIGN	0	05/01/2001

SALES DATA

OFF RECORD Number	DATE	TYPE INST	Q / U	V / I	RSN CD	SALE PRICE
1633/1018	7/27/2009	QC	U	I	11	100
GRANTOR: BOB'S IRRIGATION & LA						
GRANTEE: J H E HOLDINGS INC						
1499/1924	5/18/2007	QC	Q	I	06	100
GRANTOR: BOB'S IRRIGATION & LA						
GRANTEE: J H E HOLDINGS INC						

BUILDING NOTES

BUILDING DIMENSIONS

BAS=[YR=2008] W90 S5 W70 S5 W160 S20 E320 N30$.

LAND DESCRIPTION

TOTAL OB/XF 351,000

LN	USE CODE	CLS	LAND USE DESCRIPTION	CAP	RD	LOC ZONE	FRONT	DEPTH	TOT LND UTS	UNIT TYPE	DT	DPTH FACT	% COND	TOT ADJ	UNIT PRICE	ADJ UNIT PRICE	LAND VALUE	OTHER ADJUSTMENTS AND NOTES	YEAR	DENSITY	DECL	FRZ	YR	CONSRV

REVIEW DATE 04/18/2024 BY KWA Total Acres: 0.00 Total Land Value: 0 Market: 0 Agricultural: 0 Common: 0 PRINTED 07/30/2025 BY SYS

IN OR 1633/1018
PARCELS 25 & 26
EX 25-1

J H E HOLDINGS INC/
474431 SR 200
FERNANDINA BEACH, FL 32034

2025

40-2N-28-0000-0025-0000

BUILDING CHARACTERISTICS

ELEMENT	CD	CONSTRUCTION
Exterior Wall	15	CONC BLOCK 90
Exterior Wall	17	CB STUCCO 10
Roof Structur	09	RIDGE FRME 100
Roof Cover	04	BUILT-UP 100
Interior Wall	01	MINIMUM 100
Interior Floo	03	CONC FINSH 100
Ceiling	04	NONE 100
Air Condition	01	NONE 100
Heating Type	01	NONE 100
Plumbing		0 100
Frame	03	MASONRY 100
Story Height		10 100
RMS		20 100
Stories	1.	1. 100
Class	00	. 100
Units		0 100
Occupancy	00	NONE 100
Quality	05	Quality Level 05

DOR CODE	4840	MINI STORAGE	
MAP NUM		MKT AREA	04
NEIGHBORHOOD/LOC	4002.00		

AREA TYPE	TOTAL GROSS AREA	PCT OF BASE	YEAR	TOT ADJ AREA	SUBAREA MARKET VALUE
BAS	3,000	100	2008	3,000	107,696
TOTALS	3,000			3,000	107,696

MARKET ADJUSTMENTS

TYPE	MDL	EFF. AREA	TOT ADJ PTS	EFF. BASE RATE	REPL. COST NEW	AYB	EYB	ECON	FNCT		NORM	% COND
4804	06	3,000	114.4942	44.65	133,950	2008	2008	0	0	0	19.60	80.40

5 MINI WAREH – 0% - 0 Heated Area: 3000 HX Base Yr

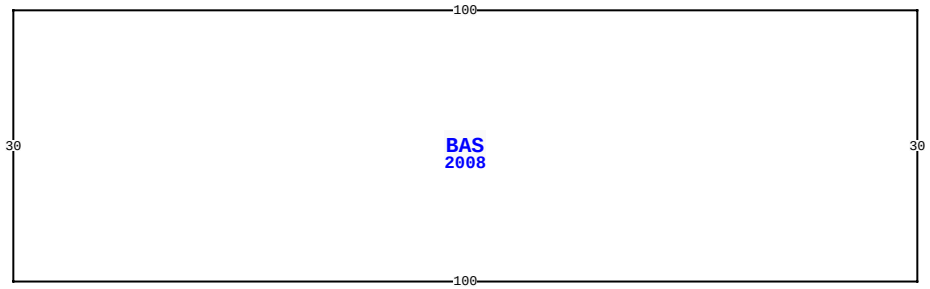

474431 SR 200, FERNANDINA BEACH

BLD DATE		LGL DATE	
XF DATE		LAND DATE	04/25/2025 DC
INC DATE		AG DATE	

NASSAU COUNTY PROPERTY

PAGE 3 of 3 4

VALUATION SUMMARY

VALUATION BY	DIRECT_CAP
Tax Group: 4	Tax Dist:
BUILDING MARKET VALUE	8,775,112
TOTAL MARKET OB/XF VALUE	0
TOTAL LAND VALUE - MARKET	0
TOTAL MARKET VALUE	8,775,112
SOH/AGL Deduction	2,870,967
ASSESSED VALUE	5,904,145
TOTAL EXEMPTION VALUE	0
BASE TAXABLE VALUE	5,904,145
TOTAL JUST VALUE	8,775,112
NCON VALUE	0
INCOME VALUE	8,775,112
PREVIOUS YEAR MKT VALUE	6,924,429

PERMIT NUM	DESCRIPTION	AMT	ISSUED
980131	SIGN	500	12/01/1998
963176	NEW CONSTR	0	11/01/1996
0115	REPAIR/RRF	3,900	09/01/1993

SALES DATA

OFF RECORD Number	DATE	TYPE INST	Q / U	V / I	RSN CD	SALE PRICE
1633/1018	7/27/2009	QC	U	I	11	100
GRANTOR: BOB'S IRRIGATION & LA						
GRANTEE: J H E HOLDINGS INC						
1499/1924	5/18/2007	QC	Q	I	06	100
GRANTOR: BOB'S IRRIGATION & LA						
GRANTEE: J H E HOLDINGS INC						

BUILDING NOTES

BUILDING DIMENSIONS

BAS=[YR=2008] W100 S30 E100 N30$.

EXTRA FEATURES

LN	OB/XF CODE	DESCRIPTION	BLD	CAP	L	W	UNITS	UT	Adj R	ADJ UNIT PRICE	ORIG COND	YEAR ON	YEAR ACTUAL	Q	% COND	OB/XF MKT VALUE	NOTES

LAND DESCRIPTION

TOTAL OB/XF 0

LN	USE CODE	CLS	LAND USE DESCRIPTION	CAP	RD	LOC ZONE	FRONT	DEPTH	TOT LND UTS	UNIT TYPE	DT	DPTH FACT	% COND	TOT ADJ	UNIT PRICE	ADJ UNIT PRICE	LAND VALUE	OTHER ADJUSTMENTS AND NOTES	YEAR	DENSITY	DECL	FRZ	YR	CONSRV

REVIEW DATE 04/18/2024 BY KWA Total Acres: 0.00 Total Land Value: 0 Market: 0 Agricultural: 0 Common: 0 PRINTED 07/30/2025 BY SYS