LOT 2
SECTION THIRTY-NINE
OR 2249/815

O'QUINN JOSEPH T & CHRISTINA M
152525 CR 108
HILLIARD, FL 32046

2025

39-3N-25-1139-0002-0000

BUILDING CHARACTERISTICS

ELEMENT	CD	CONSTRUCTION
Exterior Wall	11	BD/BTN AVG 100
Roof Structur	08	IRREGULAR 100
Roof Cover	12	MODULAR MT 100
Interior Wall	05	DRYWALL 100
Interior Floo	13	LVT/LAMNT 70
Interior Floo	14	CARPET 30
Air Condition	03	CENTRAL 100
Heating Type	04	AIR DUCTED 100
Bedrooms		3 100
Bathrooms		3 100
Frame	02	WOOD FRAME 100
Stories	2.	2. 100
Units		0 100
Quality	04	Quality Level 04
DOR CODE	0100	SINGLE FAMILY
MAP NUM		MKT AREA 05
NEIGHBORHOOD/LOC	5016.00	

AREA TYPE	TOTAL GROSS AREA	PCT OF BASE	YEAR	TOT ADJ AREA	SUBAREA MARKET VALUE
BAS	2,012	100	2024	2,012	330,000
FGR	1,062	55	2024	584	95,786
FOP	426	30	2024	128	20,995
FOP	617	30	2024	185	30,343
FUS	704	100	2024	704	115,467
STR	52	10	2024	5	820
TOTALS	4,873			3,618	593,409

MARKET ADJUSTMENTS

TYPE	MDL	EFF. AREA	TOT ADJ PTS	EFF. BASE RATE	REPL. COST NEW	AYB	EYB	ECON	FNCT		NORM	% COND
0500	01	3,618	104.3280	164.84	596,391	2023	2023	0	0	0	0.50	99.50

1 SFR CUST – 100% - 2024 Heated Area: 2716 HX Base Yr 2024

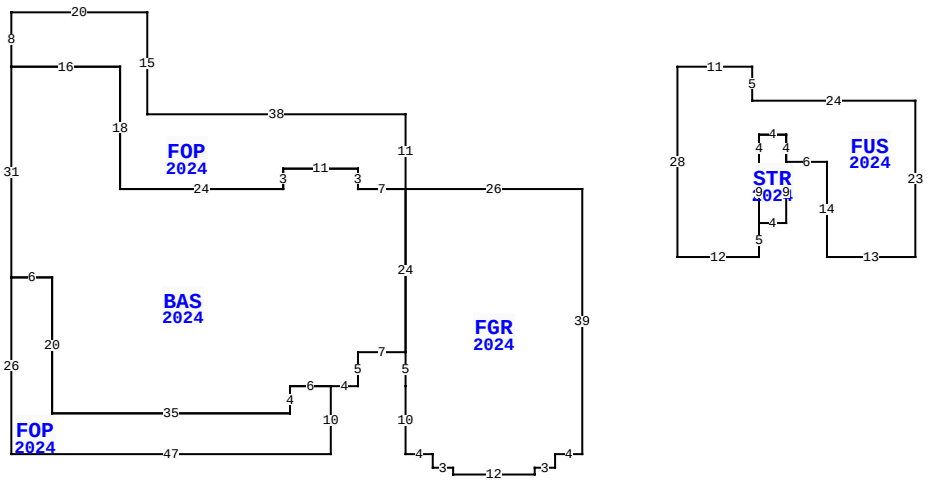

152525 CR 108, HILLIARD

BLD DATE		LGL DATE	
XF DATE		LAND DATE	05/09/2025 MLU
INC DATE		AG DATE	

NASSAU COUNTY PROPERTY

PAGE 1 of 1 4

VALUATION SUMMARY

VALUATION BY		STANDARD
Tax Group: 4	Tax Dist:	
BUILDING MARKET VALUE		593,409
TOTAL MARKET OB/XF VALUE		22,320
TOTAL LAND VALUE - MARKET		144,885
TOTAL MARKET VALUE		760,614
SOH/AGL Deduction		115,597
ASSESSED VALUE		645,017
TOTAL EXEMPTION VALUE	HX HB	50,722
BASE TAXABLE VALUE		594,295
TOTAL JUST VALUE		760,614
NCON VALUE		0
INCOME VALUE		
PREVIOUS YEAR MKT VALUE		680,907

MISC STRG CONTAINERS +ALUMN STRG/PL SHED = NV: KW

PERMIT NUM	DESCRIPTION	AMT	ISSUED
C22-07582	CO		11/13/2023
22007582	NEW CONSTR	504,291	05/16/2022
2001601	XFOB	0	02/21/2020

SALES DATA

OFF RECORD Number	DATE	TYPE INST	Q / U	V / I	RSN CD	SALE PRICE
2306/0630	9/23/2019	SW	Q	V	01	92,500

GRANTOR: RAYDIENT LLC
GRANTEE: O'QUINN JOSEPH T &

BUILDING NOTES

BUILDING DIMENSIONS

BAS=[YR=2024;ORIG=20,10] E16 S18 E24 N3 E11 S3 E7 S24 W7 S5 W4 W6 S4 W35 N20 W6 N31 $
FOP=[YR=2024;ORIG=20,2] S8 E16 S18 E24 N3 E11 S3 E7 N11 W38 N15 W20 $
FGR=[YR=2024;ORIG=104,28] W26 S24 S5 S10 E4 S2 E3 S1 E12 N1 E3 N2 E4 N39 $
FOP=[YR=2024;ORIG=67,57] W6 S4 W35 N20 W6 S26 E47 N10 $
FUS=[YR=2024;ORIG=118,10] S28 E12 N5 N9 N4 E4 S4 E6 S14 E13 N23 W24 N5 W11 $
STR=[YR=2024;ORIG=130,20] E4 S4 S9 W4 N9 N4 $
.

EXTRA FEATURES

LN	OB/XF CODE	DESCRIPTION	BLD	CAP	L	W	UNITS	UT	Adj R	ADJ UNIT PRICE	ORIG COND	YEAR ON	YEAR ACTUAL	Q	% COND	OB/XF MKT VALUE	NOTES
1	0680	POLE SHED	0	100	60	40	2,400.00	SF	10.00	10.00	100	2021	2021	3	93	22,320	

LAND DESCRIPTION

TOTAL OB/XF 22,320

LN	USE CODE	CLS	LAND USE DESCRIPTION	CAP	RD	LOC ZONE	FRONT	DEPTH	TOT LND UTS	UNIT TYPE	DT	DPTH FACT	% COND	TOT ADJ	UNIT PRICE	ADJ UNIT PRICE	LAND VALUE	OTHER ADJUSTMENTS AND NOTES	YEAR	DENSITY	DECL	FRZ	YR	CONSRV
1	000100	C	RES	100		OR	0.00	0.00	7.43	AC		1.00	1.00	1.00	19,500.00	19,500.00	144,885							

REVIEW DATE 12/23/2023 BY KW Total Acres: 7.43 Total Land Value: 144,885 Market: 0 Agricultural: 0 Common: 144,885 PRINTED 07/30/2025 BY SYS