LOT 151
BARNWELL MANOR PHASE 2
OR 2362/1884

GONZALEZ ALBERTO & LESLIE ANN
93707 NEWMARKET LANE
FERNANDINA BEACH, FL 32034

2025

39-2N-28-0141-0151-0000

NASSAU COUNTY PROPERTY

BUILDING CHARACTERISTICS

ELEMENT	CD	CONSTRUCTION
Exterior Wall	31	HARDIE BRD 100
Roof Structur	03	GABLE/HIP 100
Roof Cover	03	COMP SHNGL 100
Interior Wall	05	DRYWALL 100
Interior Floo	13	LVT/LAMNT 90
Interior Floo	11	CLAY TILE 10
Air Condition	03	CENTRAL 100
Heating Type	04	AIR DUCTED 100
Bedrooms		5 100
Bathrooms		4.5 100
Frame	03	MASONRY 100
Stories	2.	2. 100
Units		0 100
Occupancy	00	NONE 100
Quality	02	Quality Level 02
DOR CODE	0100	SINGLE FAMILY
MAP NUM		MKT AREA 04
NEIGHBORHOOD/LOC	4088.00	

AREA TYPE	TOTAL GROSS AREA	PCT OF BASE	YEAR	TOT ADJ AREA	SUBAREA MARKET VALUE
BAS	2,207	100	2022	2,207	280,292
FGR	252	55	2022	139	17,653
FGR	442	55	2022	243	30,862
FOP	119	30	2022	36	4,572
FSP	162	40	2022	65	8,256
FST	24	55	2022	13	1,651
FUS	1,229	100	2022	1,229	156,086
STR	28	10	2022	3	381
TOTALS	4,463			3,935	499,752

MARKET ADJUSTMENTS

TYPE	MDL	EFF. AREA	TOT ADJ PTS	EFF. BASE RATE	REPL. COST NEW	AYB	EYB	ECON	FNCT		NORM	% COND
0900	01	3,935	96.7005	127.64	502,263	2022	2022	0	0	0	0.50	99.50

1 SNGL FAM – 100% - 2023 Heated Area: 3436 HX Base Yr 2023

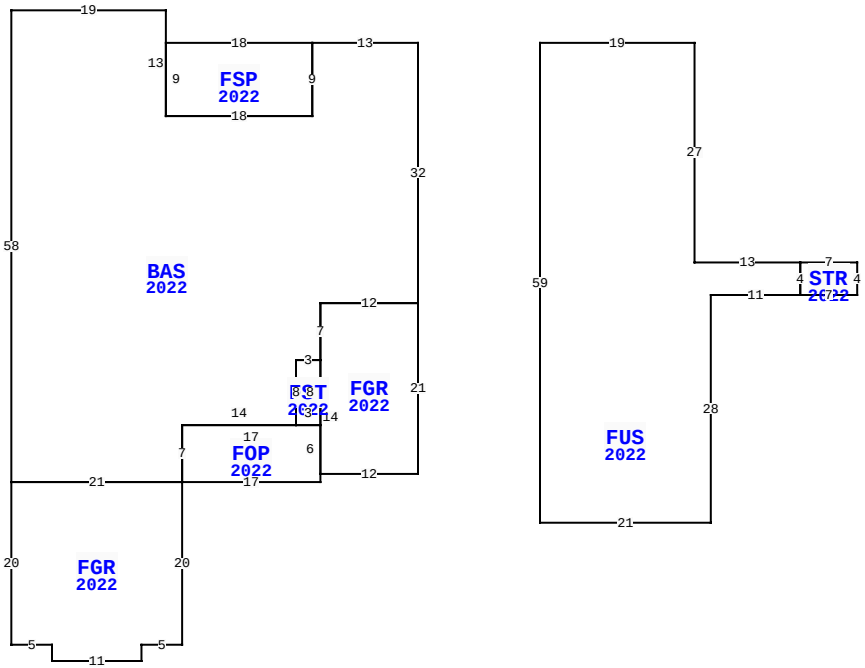

93707 NEWMARKET LN, FERNANDINA BEACH

BLD DATE		LGL DATE	
XF DATE		LAND DATE	05/06/2025 MLU
INC DATE		AG DATE	

VALUATION SUMMARY

VALUATION BY		STANDARD
Tax Group: 4	Tax Dist:	
BUILDING MARKET VALUE		499,752
TOTAL MARKET OB/XF VALUE		20,820
TOTAL LAND VALUE - MARKET		125,000
TOTAL MARKET VALUE		645,572
SOH/AGL Deduction		64,523
ASSESSED VALUE		581,049
TOTAL EXEMPTION VALUE	HX HB	50,722
BASE TAXABLE VALUE		530,327
TOTAL JUST VALUE		645,572
NCON VALUE		0
INCOME VALUE		
PREVIOUS YEAR MKT VALUE		571,865

PERMIT NUM	DESCRIPTION	AMT	ISSUED
B2111213	NEW CONSTR	494,942	08/24/2021

SALES DATA

OFF RECORD Number	DATE	TYPE INST	Q / U	V / I	RSN CD	SALE PRICE
2564/1616	5/20/2022	SW	Q	I	01	572,600

GRANTOR: AVH NORTH FLORIDA LLC
GRANTEE: GONZALEZ ALBERTO &

BUILDING NOTES

BUILDING DIMENSIONS

BAS=[YR=2022] W13 FSP=[YR=2022] W18 S9 E18 N9$ S9 W18 N13 W19 S58 FGR=[YR=2022] S20 E5 S2 E11 N2 E5 N20 W21$ E21 FOP=[YR=2022] E17 N1 FGR=[YR=2022] E12 N21 W12 S7 FST=[YR=2022] W3 S8 E3 N8$ S14$ N6 W17 S7$ N7 E14 N8 E3 N7 E12 N32$ PTR=E15 FUS=[YR=2022] E19 S27 E13 STR=[YR=2022] E7 S4 W7 N4$ S4 W11 S28 W21 N59$ W15$.

EXTRA FEATURES

LN	OB/XF CODE	DESCRIPTION	BLD	CAP	L	W	UNITS	UT	Adj R	ADJ UNIT PRICE	ORIG COND	YEAR ON	YEAR ACTUAL	Q	% COND	OB/XF MKT VALUE	NOTES
1	0855	CONC PAVER	0	100	0	0	1,297.00	SF	10.00	10.00	100	2022	2022	3	99	12,840	
2	0462	ST/AL FNC	0	100	0	0	840.00	SF	10.00	10.00	100	2022	2022	3	95	7,980	

LAND DESCRIPTION

TOTAL OB/XF 20,820

LN	USE CODE	CLS	LAND USE DESCRIPTION	CAP	RD	LOC ZONE	FRONT	DEPTH	TOT LND UTS	UNIT TYPE	DT	DPTH FACT	% COND	TOT ADJ	UNIT PRICE	ADJ UNIT PRICE	LAND VALUE	OTHER ADJUSTMENTS AND NOTES	YEAR	DENSITY	DECL	FRZ	YR	CONSRV
1	000134	C	RES POND	100		RSF-1	0.00	0.00	1.00	LT		1.00	1.00	1.00	125,000.00	125,000.00	125,000							

REVIEW DATE 09/20/2022 BY DJ Total Acres: 0.00 Total Land Value: 125,000 Market: 0 Agricultural: 0 Common: 125,000 PRINTED 07/30/2025 BY SYS