LOT 140
BARNWELL MANOR PHASE 2
OR 2362/1884

SIDHWANEY JAISHRI B & BRIJ B
93688 NEWMARKET LANE
FERNANDINA BEACH, FL 32034

2025

39-2N-28-0141-0140-0000

BUILDING CHARACTERISTICS

ELEMENT	CD	CONSTRUCTION
Exterior Wall	31	HARDIE BRD 100
Roof Structur	03	GABLE/HIP 100
Roof Cover	03	COMP SHNGL 100
Interior Wall	05	DRYWALL 100
Interior Floo	14	CARPET 70
Interior Floo	11	CLAY TILE 30
Air Condition	03	CENTRAL 100
Heating Type	04	AIR DUCTED 100
Bedrooms		5 100
Bathrooms		4 100
Frame	03	MASONRY 100
Stories	2.	2. 100
Units		0 100
Occupancy	00	NONE 100
Quality	02	Quality Level 02
DOR CODE	0100	SINGLE FAMILY
MAP NUM		MKT AREA 04
NEIGHBORHOOD/LOC	4088.00	

AREA TYPE	TOTAL GROSS AREA	PCT OF BASE	YEAR	TOT ADJ AREA	SUBAREA MARKET VALUE
BAS	1,333	100	2022	1,333	170,500
FGR	685	55	2022	377	48,221
FOP	50	30	2022	15	1,918
FSP	180	40	2022	72	9,210
FUS	1,829	100	2022	1,829	233,942
STR	112	10	2022	11	1,407
TOTALS	4,189			3,637	465,198

MARKET ADJUSTMENTS

TYPE	MDL	EFF. AREA	TOT ADJ PTS	EFF. BASE RATE	REPL. COST NEW	AYB	EYB	ECON	FNCT		NORM	% COND
0900	01	3,637	97.3845	128.55	467,536	2022	2022	0	0	0	0.50	99.50

1 SNGL FAM – 100% - 2023 Heated Area: 3162 HX Base Yr 2023

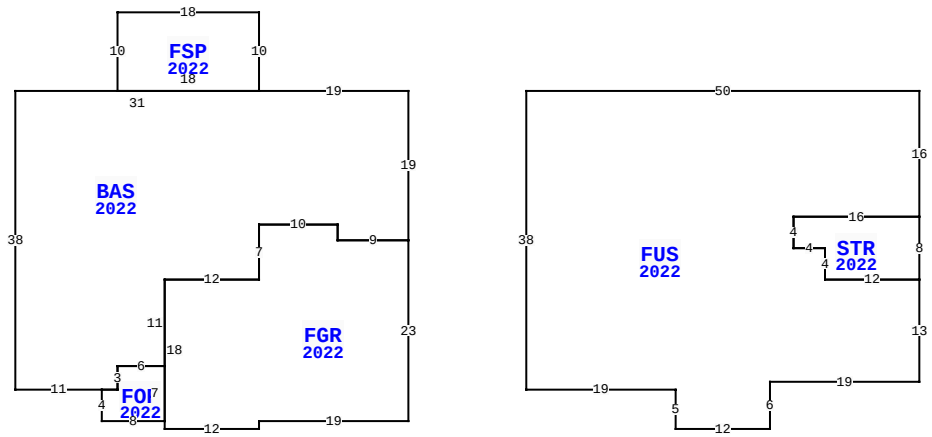

93688 NEWMARKET LN, FERNANDINA BEACH

BLD DATE		LGL DATE	
XF DATE		LAND DATE	05/06/2025 MLU
INC DATE		AG DATE	

NASSAU COUNTY PROPERTY

PAGE 1 of 1 4

VALUATION SUMMARY

VALUATION BY		STANDARD
Tax Group: 4	Tax Dist:	
BUILDING MARKET VALUE		465,198
TOTAL MARKET OB/XF VALUE		5,560
TOTAL LAND VALUE - MARKET		125,000
TOTAL MARKET VALUE		595,758
SOH/AGL Deduction		64,552
ASSESSED VALUE		531,206
TOTAL EXEMPTION VALUE	HX HB	50,722
BASE TAXABLE VALUE		480,484
TOTAL JUST VALUE		595,758
NCON VALUE		0
INCOME VALUE		
PREVIOUS YEAR MKT VALUE		523,348

PERMIT NUM	DESCRIPTION	AMT	ISSUED
B2105926	NEW CONSTR	456,848	05/10/2021

SALES DATA

OFF RECORD Number	DATE	TYPE INST	Q / U	V / I	RSN CD	SALE PRICE
2554/1901	3/21/2022	SW	Q	I	02	551,400

GRANTOR: AVH NORTH FLORIDA LLC
GRANTEE: SIDHWANEY JAISHRI B

BUILDING NOTES

BUILDING DIMENSIONS

BAS=[YR=2022] W19 FSP=[YR=2022] N10 W18 S10 E18$ W31 S38 E11 FOP=[YR=2022] S4 E8 FGR=[YR=2022] S1 E12 N1 E19 N23 W9 N2 W10 S7 W12 S18$ N7 W6 S3 W2$ E2 N3 E6 N11 E12 N7 E10 S2 E9 N19$ PTR=E15 FUS=[YR=2022] E50 S16 STR=[YR=2022] S8 W12 N4 W4 N4 E16$ W16 S4 E4 S4 E12 S13 W19 S6 W12 N5 W19 N38$ W15 $.

EXTRA FEATURES

LN	OB/XF CODE	DESCRIPTION	BLD	CAP	L	W	UNITS	UT	Adj R	ADJ UNIT PRICE	ORIG COND	YEAR ON	YEAR ACTUAL	Q	% COND	OB/XF MKT VALUE	NOTES
1	0811	CONCRETE B	0	100	0	0	1,080.00	SF	5.20	5.20	100	2022	2022	3	99	5,560	

LAND DESCRIPTION

TOTAL OB/XF 5,560

LN	USE CODE	CLS	LAND USE DESCRIPTION	CAP	RD	LOC ZONE	FRONT	DEPTH	TOT LND UTS	UNIT TYPE	DT	DPTH FACT	% COND	TOT ADJ	UNIT PRICE	ADJ UNIT PRICE	LAND VALUE	OTHER ADJUSTMENTS AND NOTES	YEAR	DENSITY	DECL	FRZ	YR	CONSRV
1	000100	C	RES	100		RSF-1	0.00	0.00	1.00	LT		1.00	1.00	1.00	125,000.00	125,000.00	125,000							

REVIEW DATE 09/20/2022 BY DJ Total Acres: 0.00 Total Land Value: 125,000 Market: 0 Agricultural: 0 Common: 125,000 PRINTED 07/30/2025 BY SYS