LOT 134
BARNWELL MANOR PHASE 2
OR 2362/1884

ESCHERICH KYLE GUNTHER & CAROLYN JEWELL
93647 EPSOM CT
FERNANDINA BEACH, FL 32034

2025

39-2N-28-0141-0134-0000

NASSAU COUNTY PROPERTY

BUILDING CHARACTERISTICS

ELEMENT	CD	CONSTRUCTION
Exterior Wall	31	HARDIE BRD 100
Roof Structur	08	IRREGULAR 100
Roof Cover	03	COMP SHNGL 100
Interior Wall	05	DRYWALL 100
Interior Floo	14	CARPET 60
Interior Floo	12	HARDWOOD 40
Air Condition	03	CENTRAL 100
Heating Type	04	AIR DUCTED 100
Bedrooms		5 100
Bathrooms		4 100
Frame	02	WOOD FRAME 100
Stories	2.	2. 100
Units		0 100
Occupancy	00	NONE 100
Quality	02	Quality Level 02
DOR CODE	0100	SINGLE FAMILY
MAP NUM		MKT AREA 04
NEIGHBORHOOD/LOC	4088.00	

AREA TYPE	TOTAL GROSS AREA	PCT OF BASE	YEAR	TOT ADJ AREA	SUBAREA MARKET VALUE
BAS	1,333	100	2021	1,333	168,297
FGR	685	55	2021	377	47,598
FOP	173	30	2021	52	6,566
FOP	320	30	2021	96	12,121
FUS	1,874	100	2021	1,874	236,601
STR	80	10	2021	8	1,010
TOTALS	4,465			3,740	472,192

MARKET ADJUSTMENTS

TYPE	MDL	EFF. AREA	TOT ADJ PTS	EFF. BASE RATE	REPL. COST NEW	AYB	EYB	ECON	FNCT		NORM	% COND
0900	01	3,740	96.6150	127.53	476,962	2021	2021	0	0	0	1.00	99.00

1 SNGL FAM – 100% - 2022 Heated Area: 3207 HX Base Yr 2022

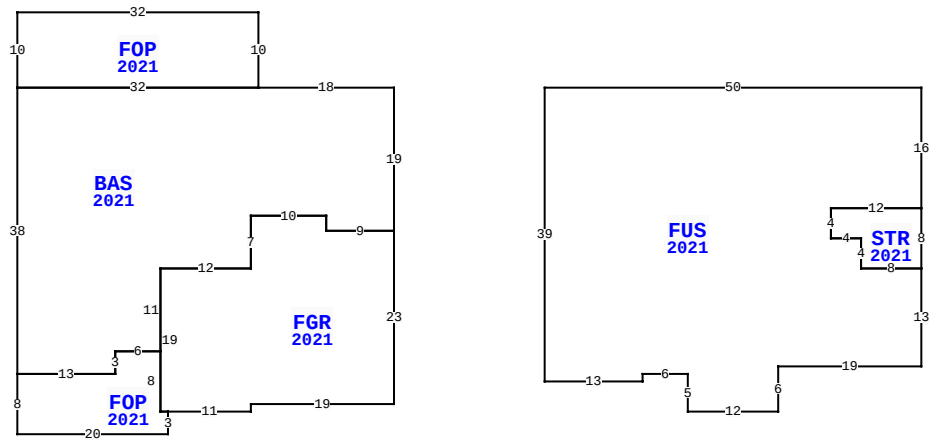

93647 EPSOM CT, FERNANDINA BEACH

BLD DATE		LGL DATE	
XF DATE		LAND DATE	05/06/2025 MLU
INC DATE		AG DATE	

VALUATION SUMMARY

VALUATION BY		STANDARD
Tax Group: 4	Tax Dist:	
BUILDING MARKET VALUE		472,192
TOTAL MARKET OB/XF VALUE		23,688
TOTAL LAND VALUE - MARKET		125,000
TOTAL MARKET VALUE		620,880
SOH/AGL Deduction		138,644
ASSESSED VALUE		482,236
TOTAL EXEMPTION VALUE	HX HB	50,722
BASE TAXABLE VALUE		431,514
TOTAL JUST VALUE		620,880
NCON VALUE		0
INCOME VALUE		
PREVIOUS YEAR MKT VALUE		548,450

PERMIT NUM	DESCRIPTION	AMT	ISSUED
22008701	ADDITION	7,494	06/07/2022
C2006770	CO ISSUED	0	05/17/2021
B2006770	NEW CONSTR	440,364	09/01/2020

SALES DATA

OFF RECORD Number	DATE	TYPE INST	Q / U	V / I	RSN CD	SALE PRICE
2463/1909	5/20/2021	SW	Q	I	02	532,000

GRANTOR: AVH NORTH FLORIDA LLC
GRANTEE: ESCHERICH KYLE GUNT

BUILDING NOTES

BUILDING DIMENSIONS

BAS=[YR=2021] W18 FOP=[YR=2021] N10 W32 S10 E32$ W32 S38 FOP=[YR=2021] S8 E20 N3 FGR=[YR=2021] E11 N1 E19 N23 W9 N2 W10 S7 W12 S19 E1$ W1 N8 W6 S3 W13 $ E13 N3 E6 N11 E12 N7 E10 S2 E9 N19$ PTR= E20 FUS=[YR=2021] E50 S16 STR=[YR=2021] S8 W8 N4 W4 N4 E12$ W12 S4 E4 S4 E8 S13 W19 S6 W12 N5 W6 S1 W13 N39$ W20$.

EXTRA FEATURES

LN	OB/XF CODE	DESCRIPTION	BLD	CAP	L	W	UNITS	UT	Adj R	ADJ UNIT PRICE	ORIG COND	YEAR ON	YEAR ACTUAL	Q	% COND	OB/XF MKT VALUE	NOTES
1	0855	CONC PAVER	0	100	8	3	24.00	SF	10.00	10.00	100	2021	2021	3	99	238	
2	0855	CONC PAVER	0	100	0	0	1,150.00	SF	10.00	10.00	100	2021	2021	3	99	11,385	
3	0476	VF 6 SBPL	0	100	0	0	96.00	LF	32.00	32.00	100	2021	2021	3	96	2,949	
4	0470	VNYL GATE	0	100	0	0	1.00	UT	300.00	300.00	100	2021	2021	3	96	288	
5	0462	ST/AL FNC	0	100	0	0	312.00	SF	10.00	10.00	100	2022	2022	3	95	2,964	
6	0911	SCRN RM A	0	100	7	32	224.00	SF	17.50	17.50	100	2022	2022	3	93	3,646	
7	0855	CONC PAVER	0	100	7	32	224.00	SF	10.00	10.00	100	2022	2022	3	99	2,218	

LAND DESCRIPTION

TOTAL OB/XF 23,688

LN	USE CODE	CLS	LAND USE DESCRIPTION	CAP	RD	LOC ZONE	FRONT	DEPTH	TOT LND UTS	UNIT TYPE	DT	DPTH FACT	% COND	TOT ADJ	UNIT PRICE	ADJ UNIT PRICE	LAND VALUE	OTHER ADJUSTMENTS AND NOTES	YEAR	DENSITY	DECL	FRZ	YR	CONSRV
1	000100	C	RES	100		RSF-1	0.00	0.00	1.00	LT		1.00	1.00	1.00	125,000.00	125,000.00	125,000							

REVIEW DATE 01/04/2022 BY DJ Total Acres: 0.00 Total Land Value: 125,000 Market: 0 Agricultural: 0 Common: 125,000 PRINTED 07/30/2025 BY SYS