LOT 130
BARNWELL MANOR PHASE 2
OR 2362/1884

GHAFFARIAN SHERVIN CLINT & KRISTEN MICHELLE
93594 NEWMARKET LANE
FERNANDINA BEACH, FL 32034

2025

39-2N-28-0141-0130-0000

NASSAU COUNTY PROPERTY

BUILDING CHARACTERISTICS

ELEMENT	CD	CONSTRUCTION
Exterior Wall	31	HARDIE BRD 100
Roof Structur	08	IRREGULAR 100
Roof Cover	03	COMP SHNGL 100
Interior Wall	05	DRYWALL 100
Interior Floo	11	CLAY TILE 60
Interior Floo	14	CARPET 40
Air Condition	03	CENTRAL 100
Heating Type	04	AIR DUCTED 100
Bedrooms		5 100
Bathrooms		4 100
Frame	02	WOOD FRAME 100
Stories	2.	2. 100
Units		0 100
Occupancy	00	NONE 100
Quality	02	Quality Level 02
DOR CODE	0100	SINGLE FAMILY
MAP NUM		MKT AREA 04
NEIGHBORHOOD/LOC	4088.00	

AREA TYPE	TOTAL GROSS AREA	PCT OF BASE	YEAR	TOT ADJ AREA	SUBAREA MARKET VALUE
BAS	1,333	100	2020	1,333	176,048
FGR	685	55	2020	377	49,790
FOP	173	30	2020	52	6,867
FSP	180	40	2020	72	9,509
FUS	1,874	100	2020	1,874	247,497
STR	80	10	2020	8	1,057
TOTALS	4,325			3,716	490,767

MARKET ADJUSTMENTS

TYPE	MDL	EFF. AREA	TOT ADJ PTS	EFF. BASE RATE	REPL. COST NEW	AYB	EYB	ECON	FNCT		NORM	% COND
0900	01	3,716	101.5740	134.08	498,241	2020	2020	0	0	0	1.50	98.50

1 SNGL FAM – 100% - 2022 Heated Area: 3207 HX Base Yr 2022

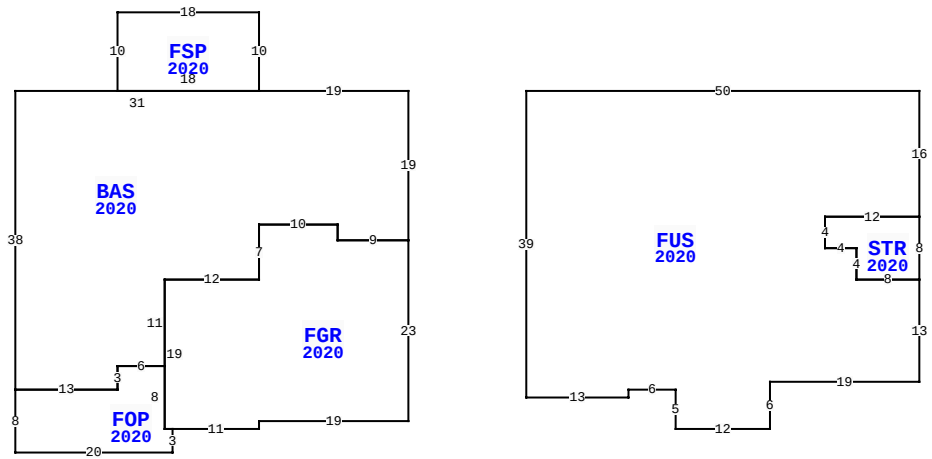

93594 NEWMARKET LN, FERNANDINA BEACH

BLD DATE		LGL DATE	
XF DATE		LAND DATE	05/06/2025 MLU
INC DATE		AG DATE	

VALUATION SUMMARY

VALUATION BY		STANDARD
Tax Group: 4	Tax Dist:	
BUILDING MARKET VALUE		490,767
TOTAL MARKET OB/XF VALUE		23,084
TOTAL LAND VALUE - MARKET		125,000
TOTAL MARKET VALUE		638,851
SOH/AGL Deduction		229,203
ASSESSED VALUE		409,648
TOTAL EXEMPTION VALUE	HX HB	50,722
BASE TAXABLE VALUE		358,926
TOTAL JUST VALUE		638,851
NCON VALUE		0
INCOME VALUE		
PREVIOUS YEAR MKT VALUE		565,480

PERMIT NUM	DESCRIPTION	AMT	ISSUED
C2003346	CO ISSUED	0	10/21/2020
B2003346	NEW CONSTR	433,264	04/17/2020

SALES DATA

OFF RECORD Number	DATE	TYPE INST	Q / U	V / I	RSN CD	SALE PRICE
2401/1717	10/23/2020	SW	Q	I	01	423,200

GRANTOR: AVH NORTH FLORIDA LLC
GRANTEE: GHAFFARIAN SHERVIN

BUILDING NOTES

EXTRA FEATURES

L N	OB/XF CODE	DESCRIPTION	BLD	CAP	L	W	UNITS	UT	Adj R	ADJ UNIT PRICE	ORIG COND	YEAR ON	YEAR ACTUAL	Q	% COND	OB/XF MKT VALUE	NOTES
1	0855	CONC PAVER	0	100	11	3	33.00	SF	10.00	10.00	100	2020	2020	3	98	323	
2	0855	CONC PAVER	0	100	0	0	1,360.00	SF	10.00	10.00	100	2020	2020	3	98	13,328	
3	0476	VF 6 SBPL	0	100	0	0	204.00	LF	32.00	32.00	100	2020	2020	3	95	6,202	
4	0470	VNYL GATE	0	100	0	0	3.00	UT	300.00	300.00	100	2020	2020	3	95	855	
5	0462	ST/AL FNC	0	100	66	0	264.00	SF	10.00	10.00	100	2020	2020	3	90	2,376	

BUILDING DIMENSIONS

BAS=[YR=2020] W19 FSP=[YR=2020] N10 W18 S10 E18$ W31 S38 FOP=[YR=2020] S8 E20 N3 FGR=[YR=2020] E11 N1 E19 N23 W9 N2 W10 S7 W12 S19 E1$ W1 N8 W6 S3 W13$ E13 N3 E6 N11 E12 N7 E10 S2 E9 N19$ PTR= E15 FUS=[YR=2020] E50 S16 STR=[YR=2020] S8 W8 N4 W4 N4 E12$ W12 S4 E4 S4 E8 S13 W19 S6 W12 N5 W6 S1 W13 N39$ W15$.

LAND DESCRIPTION

TOTAL OB/XF 23,084

L N	USE CODE	CLS	LAND USE DESCRIPTION	CAP	R D	LOC ZONE	FRONT	DEPTH	TOT LND UTS	UNIT TYPE	D T	DPTH FACT	% COND	TOT ADJ	UNIT PRICE	ADJ UNIT PRICE	LAND VALUE	OTHER ADJUSTMENTS AND NOTES	YEAR	DENSITY	DECL	FRZ	YR	CONSRV
1	000100	C	RES	100		RSF-1	0.00	0.00	1.00	LT		1.00	1.00	1.00	125,000.00	125,000.00	125,000							

REVIEW DATE 02/24/2021 BY KW Total Acres: 0.00 Total Land Value: 125,000 Market: 0 Agricultural: 0 Common: 125,000 PRINTED 07/30/2025 BY SYS