LOT 75
BARNWELL MANOR PHASE 1
PBK 8/293

KNIGHT BENJAMIN H JR & JILL P
93193 SANDOWN DR
FERNANDINA BEACH, FL 32034

2025

39-2N-28-0141-0075-0000

BUILDING CHARACTERISTICS

ELEMENT	CD	CONSTRUCTION
Exterior Wall	31	HARDIE BRD 100
Roof Structur	08	IRREGULAR 100
Roof Cover	03	COMP SHNGL 100
Interior Wall	05	DRYWALL 100
Interior Floo	11	CLAY TILE 50
Interior Floo	14	CARPET 50
Air Condition	03	CENTRAL 100
Heating Type	04	AIR DUCTED 100
Bedrooms		4 100
Bathrooms		4.5 100
Frame	02	WOOD FRAME 100
Stories	2.	2. 100
Units		0 100
Occupancy	00	NONE 100
Quality	02	Quality Level 02

DOR CODE 0100 SINGLE FAMILY
MAP NUM | MKT AREA 04
NEIGHBORHOOD/LOC 4088.00

AREA TYPE	TOTAL GROSS AREA	PCT OF BASE	YEAR	TOT ADJ AREA	SUBAREA MARKET VALUE
BAS	2,265	100	2019	2,265	287,806
FGR	460	55	2019	253	32,148
FOP	221	30	2019	66	8,387
FOP	291	30	2019	87	11,054
FUS	1,406	100	2019	1,406	178,656
STR	71	10	2019	7	890
TOTALS	4,714			4,084	518,940

MARKET ADJUSTMENTS

TYPE	MDL	EFF. AREA	TOT ADJ PTS	EFF. BASE RATE	REPL. COST NEW	AYB	EYB	ECON	FNCT		NORM	% COND
0900	01	4,084	98.2300	129.66	529,531	2019	2019	0	0	0	2.00	98.00

1 SNGL FAM – 100% - 2020 Heated Area: 3671 HX Base Yr 2020

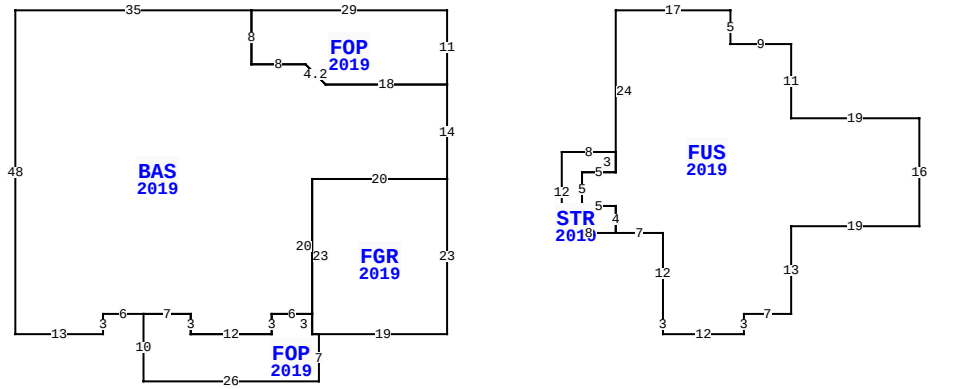

93193 SANDOWN DR, FERNANDINA BEACH

BLD DATE		LGL DATE	
XF DATE		LAND DATE	05/06/2025 MLU
INC DATE		AG DATE	

NASSAU COUNTY PROPERTY

PAGE 1 of 1 4

VALUATION SUMMARY

VALUATION BY		STANDARD
Tax Group: 4	Tax Dist:	
BUILDING MARKET VALUE		518,940
TOTAL MARKET OB/XF VALUE		11,551
TOTAL LAND VALUE - MARKET		125,000
TOTAL MARKET VALUE		655,491
SOH/AGL Deduction		249,478
ASSESSED VALUE		406,013
TOTAL EXEMPTION VALUE	HX HB	50,722
BASE TAXABLE VALUE		355,291
TOTAL JUST VALUE		655,491
NCON VALUE		0
INCOME VALUE		
PREVIOUS YEAR MKT VALUE		580,622

PERMIT NUM	DESCRIPTION	AMT	ISSUED
C1807449	CO ISSUED	0	06/14/2019
B1807449	NEW CONSTR	469,197	10/01/2018

SALES DATA

OFF RECORD Number	DATE	TYPE INST	Q / U	V / I	RSN CD	SALE PRICE
2282/0832	5/31/2019	SW	Q	I	01	492,300

GRANTOR: AVH NORTH FLORIDA LLC
GRANTEE: KNIGHT BENJAMIN H J

BUILDING NOTES

BUILDING DIMENSIONS

FOP=[YR=2019] W29 BAS=[YR=2019] W35 S48 E13 N3 E6 FOP=[YR=2019] S10 E26 N7 FGR=[YR=2019] E19 N23 W20 S23 E1$ W1 N3 W6 S3 W12 N3 W7$ E7 S3 E12 N3 E6 N20 E20 N14 W18 U3 L3 W8 N8$ S8 E8 D3 R3 E18 N11$ PTR= E25 FUS=[YR=2019] E17 S5 E9 S11 E19 S16 W19 S13 W7 S3 W12 N3 N12 W7 STR=[YR=2019] W8 N12 E8 S3 W5 S5 E5 S4$ N4 W5 N5 E5 N24$ W25$.

EXTRA FEATURES

LN	OB/XF CODE	DESCRIPTION	BLD	CAP	L	W	UNITS	UT	Adj R	ADJ UNIT PRICE	ORIG COND	YEAR ON	YEAR ACTUAL	Q	% COND	OB/XF MKT VALUE	NOTES
1	0855	CONC PAVER	0	100	26	4	104.00	SF	10.00	10.00	100	2019	2019	3	97	1,009	
2	0855	CONC PAVER	0	100	0	0	809.00	SF	10.00	10.00	100	2019	2019	3	97	7,847	
3	0855	CONC PAVER	0	100	0	0	275.00	SF	10.00	10.00	100	2020	2020	3	98	2,695	

LAND DESCRIPTION

TOTAL OB/XF 11,551

LN	USE CODE	CLS	LAND USE DESCRIPTION	CAP	RD	LOC ZONE	FRONT	DEPTH	TOT LND UTS	UNIT TYPE	DT	DPTH FACT	% COND	TOT ADJ	UNIT PRICE	ADJ UNIT PRICE	LAND VALUE	OTHER ADJUSTMENTS AND NOTES	YEAR	DENSITY	DECL	FRZ	YR	CONSRV
1	000100	C	RES	100		RSF-1	0.00	0.00	1.00	LT		1.00	1.00	1.00	125,000.00	125,000.00	125,000							

REVIEW DATE 02/25/2021 BY KWX Total Acres: 0.00 Total Land Value: 125,000 Market: 0 Agricultural: 0 Common: 125,000 PRINTED 07/30/2025 BY SYS