LOT 48
BRADY POINT PRESERVE PB 7/76

CARNES VALERIE L TRUST/CARNES VALERIE L TRUSTEE
96175 BRADY POINT RD
FERNANDINA BEACH, FL 32034

2025

38-2N-28-0180-0048-0000

BUILDING CHARACTERISTICS

ELEMENT	CD	CONSTRUCTION
Exterior Wall	31	HARDIE BRD 100
Roof Structur	08	IRREGULAR 100
Roof Cover	03	COMP SHNGL 100
Interior Wall	05	DRYWALL 100
Interior Floo	12	HARDWOOD 60
Interior Floo	11	CLAY TILE 40
Air Condition	03	CENTRAL 100
Heating Type	04	AIR DUCTED 100
Bedrooms		4 100
Bathrooms		4 100
Frame	02	WOOD FRAME 100
Stories	2.	2. 100
Units		0 100
Quality	03	Quality Level 03
DOR CODE	0100	SINGLE FAMILY
MAP NUM		MKT AREA 04
NEIGHBORHOOD/LOC	4014.00	

AREA TYPE	TOTAL GROSS AREA	PCT OF BASE	YEAR	TOT ADJ AREA	SUBAREA MARKET VALUE
BAS	2,438	100	2016	2,438	642,373
FAT	175	20	2025	35	9,222
FGR	975	55	2016	536	141,227
FOP	63	30	2016	19	5,006
FOP	180	30	2016	54	14,228
FSP	522	40	2016	209	55,068
FUS	194	100	2016	194	51,116
FUS	928	100	2016	928	244,513
FUS	87	100	2025	87	22,923
FUS	228	100	2025	228	60,074
TOTALS	5,916			4,740	1,248,913

MARKET ADJUSTMENTS

TYPE	MDL	EFF. AREA	TOT ADJ PTS	EFF. BASE RATE	REPL. COST NEW	AYB	EYB	ECON	FNCT		NORM	% COND
0500	12	4,740	172.8084	273.04	1,294,210	2016	2016	0	0	0	3.50	96.50

1 SFR CUST – 100% - 2025 Heated Area: 3910 HX Base Yr 2025

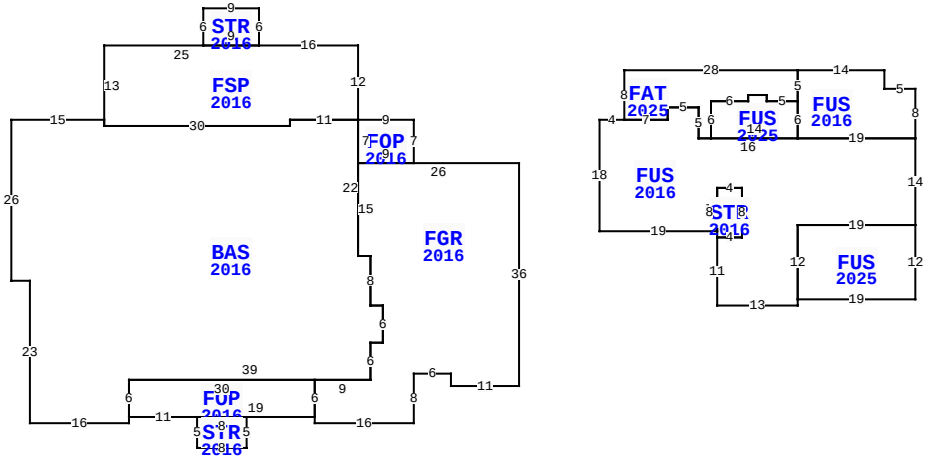

** This building has 13 Sub-Areas

96175 BRADY POINT RD, FERNANDINA BEACH

BLD DATE		LGL DATE	
XF DATE		LAND DATE	03/26/2025 MLU
INC DATE		AG DATE	

NASSAU COUNTY PROPERTY

PAGE 1 of 1 4

VALUATION SUMMARY

VALUATION BY		STANDARD
Tax Group: 4	Tax Dist:	
BUILDING MARKET VALUE		1,248,913
TOTAL MARKET OB/XF VALUE		19,875
TOTAL LAND VALUE - MARKET		212,500
TOTAL MARKET VALUE		1,481,288
SOH/AGL Deduction		486,106
ASSESSED VALUE		995,182
TOTAL EXEMPTION VALUE	HX HB WX	55,722
BASE TAXABLE VALUE		939,460
TOTAL JUST VALUE		1,481,288
NCON VALUE		85,350
INCOME VALUE		
PREVIOUS YEAR MKT VALUE		1,055,547

PERMIT NUM	DESCRIPTION	AMT	ISSUED
B230015536	CONSTRUCT DORMER	100,000	12/05/2023
B1530763	CO ISSUED	0	04/18/2016
B1530763	NEW CONSTR	408,594	07/01/2015

SALES DATA

OFF RECORD Number	DATE	TYPE INST	Q / U	V / I	RSN CD	SALE PRICE
2730/270	7/17/2024	WD	U	I	11	100
GRANTOR: CARNES VALERIE L						
GRANTEE: CARNES VALERIE L TR						
2527/0398	1/06/2022	WD	Q	I	01	1,167,000
GRANTOR: ROTHENBERG STEVEN & E						
GRANTEE: CARNES VALERIE L						

BUILDING NOTES

EXTRA FEATURES

LN	OB/XF CODE	DESCRIPTION	BLD	CAP	L	W	UNITS	UT	Adj R	ADJ UNIT PRICE	ORIG COND	YEAR ON	YEAR ACTUAL	Q	% COND	OB/XF MKT VALUE	NOTES
1	0812	CONCRETE C	0	100	0	0	2,356.00	SF	4.00	4.00	100	2016	2016	3	95	8,953	
2	0500	FP-PRE FAB	0	100	0	0	1.00	UT	3,500.00	3,500.00	100	2016	2016	3	97	3,395	
3	0462	ST/AL FNC	0	100	193	0	965.00	SF	10.00	10.00	100	2016	2016	3	78	7,527	

BUILDING DIMENSIONS

BAS=[YR=2016;ORIG=-9,0] W11 S1 W30 N1 W15 S26 E3 S23 E16 N1 N6 E39 N6 E2 N6 W2 N8 W2 N22 $
FGR=[YR=2016;ORIG=-16,48] S1 E16 N8 E6 S2 E11 N36 W26 S15 E2 S8 E2 S6 W2 S6 W9 S6 $
FUS=[YR=2016;ORIG=30,0] E4 E7 N2 E5 S5 E16 E19 S14 W19 S12 S1 W13 N11 E4 N8 W4 S7 W19 N18 $
FSP=[YR=2016;ORIG=-9,0] N12 W16 W25 S13 E30 N1 E11 $
FUS=[YR=2016;ORIG=62,3] N6 N5 E14 S3 E5 S8 W19 $
FOP=[YR=2016;ORIG=-46,48] E11 E19 N6 W30 S6 $
FOP=[YR=2016;ORIG=0,0] W9 S7 E9 N7 $
STR=[YR=2016;ORIG=-25,-12] N6 W9 S6 E9 $
STR=[YR=2016;ORIG=-35,48] S5 E8 N5 W8 $

LAND DESCRIPTION

TOTAL OB/XF 19,875

LN	USE CODE	CLS	LAND USE DESCRIPTION	CAP	RD	LOC ZONE	FRONT	DEPTH	TOT LND UTS	UNIT TYPE	DT	DPTH FACT	% COND	TOT ADJ	UNIT PRICE	ADJ UNIT PRICE	LAND VALUE	OTHER ADJUSTMENTS AND NOTES	YEAR	DENSITY	DECL	FRZ	YR	CONSRV
1	000135	C	RES NATURAL	100		RSF-1	0.00	0.00	1.00	LT		1.00	1.00	1.00	212,500.00	212,500.00	212,500							

REVIEW DATE 01/29/2025 BY NWX Total Acres: 0.00 Total Land Value: 212,500 Market: 0 Agricultural: 0 Common: 212,500 PRINTED 07/30/2025 BY SYS