LOT 29
BRADY POINT PRESERVE PB 7/76

PONSFORD DAVID J
96040 BRADY POINT RD
FERNANDINA BEACH, FL 32034

2025

38-2N-28-0180-0029-0000

NASSAU COUNTY PROPERTY

BUILDING CHARACTERISTICS

ELEMENT	CD	CONSTRUCTION
Exterior Wall	31	HARDIE BRD 100
Roof Structur	08	IRREGULAR 100
Roof Cover	13	STAND SEAM 100
Interior Wall	05	DRYWALL 100
Interior Floo	12	HARDWOOD 90
Interior Floo	11	CLAY TILE 10
Air Condition	03	CENTRAL 100
Heating Type	03	FORCED AIR 100
Bedrooms		4 100
Bathrooms		4.5 100
Frame	02	WOOD FRAME 100
Stories	2.	2. 100
Units		0 100
Quality	03	Quality Level 03
DOR CODE	0100	SINGLE FAMILY
MAP NUM		MKT AREA 04
NEIGHBORHOOD/LOC	4014.00	

AREA TYPE	TOTAL GROSS AREA	PCT OF BASE	YEAR	TOT ADJ AREA	SUBAREA MARKET VALUE
BAS	2,022	100	2024	2,022	643,906
FGR	1,080	55	2024	594	189,159
FOP	96	30	2024	29	9,235
FOP	240	30	2024	72	22,928
FOP	240	30	2024	72	22,928
FUS	720	100	2024	720	229,284
FUS	1,110	100	2024	1,110	353,480
PTO	56	5	2024	3	955
STP	6	10	2024	1	318
STP	6	10	2024	1	318
TOTALS	7,170			5,058	1,610,720

MARKET ADJUSTMENTS

TYPE	MDL	EFF. AREA	TOT ADJ PTS	EFF. BASE RATE	REPL. COST NEW	AYB	EYB	ECON	FNCT		NORM	% COND
0500	12	5,058	201.5520	318.45	1,610,720	2023	2023	0	0	0	0.00	100.00

1 SFR CUST – 100% - 2024 Heated Area: 3852 HX Base Yr 2024

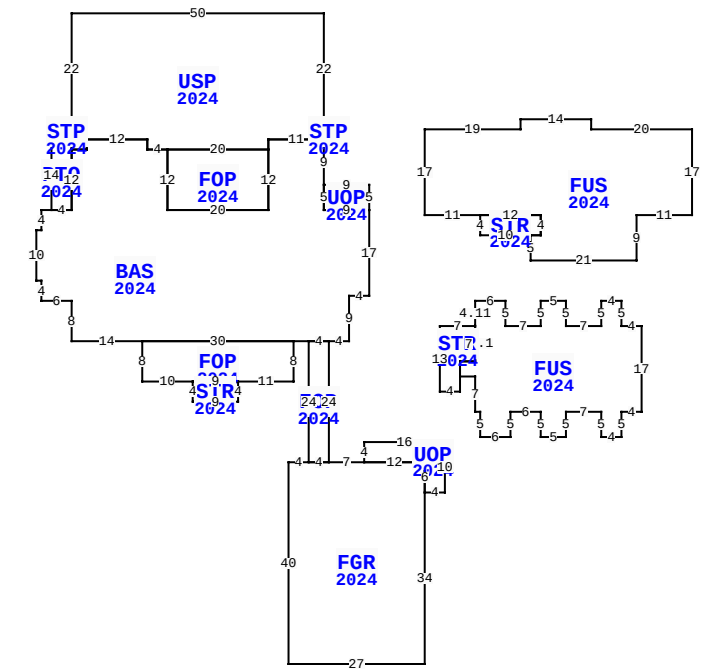

** This building has 16 Sub-Areas

96040 BRADY POINT RD, FERNANDINA BEACH

BLD DATE		LGL DATE	
XF DATE		LAND DATE	03/15/2024 MLU
INC DATE		AG DATE	

VALUATION SUMMARY

VALUATION BY		STANDARD
Tax Group: 4	Tax Dist:	
BUILDING MARKET VALUE		1,610,720
TOTAL MARKET OB/XF VALUE		85,265
TOTAL LAND VALUE - MARKET		410,000
TOTAL MARKET VALUE		2,105,985
SOH/AGL Deduction		419,979
ASSESSED VALUE		1,686,006
TOTAL EXEMPTION VALUE	HX HB	50,722
BASE TAXABLE VALUE		1,635,284
TOTAL JUST VALUE		2,105,985
NCON VALUE		0
INCOME VALUE		
PREVIOUS YEAR MKT VALUE		1,638,490

PERMIT NUM	DESCRIPTION	AMT	ISSUED
22007419	SWIM POOL	120,000	10/01/2022
22007604	NEW CONSTR	651,660	05/16/2022
220003098		651,660	

SALES DATA

OFF RECORD Number	DATE	TYPE INST	Q U	V I	RSN CD	SALE PRICE
2482/1336	7/19/2021	WD	Q	V	01	415,000
GRANTOR: THAMES JOHN F REVOCAB						
GRANTEE: PONSFORD DAVID J						
2386/0419	8/21/2020	WD	Q	V	01	295,000
GRANTOR: SMITH ALAN J						
GRANTEE: THAMES JOHN F REVOC						

BUILDING NOTES

EXTRA FEATURES

LN	OB/XF CODE	DESCRIPTION	BLD	CAP	L	W	UNITS	UT	Adj R	ADJ UNIT PRICE	ORIG COND	YEAR ON	YEAR ACTUAL	Q	% COND	OB/XF MKT VALUE	NOTES
1	0502	FP-CUSTOM	0	100	0	0	1.00	UT	10,000.00	10,000.00	100	2024	2023		100	10,000	
2	0861	POOL GUNIT	0	100	0	0	450.00	SF	85.00	85.00	100	2024	2023		98	37,485	
3	0871	POOL HTR R	0	100	0	0	1.00	UT	2,000.00	2,000.00	100	2024	2023		97	1,940	
4	0855	CONC PAVER	0	100	0	0	3,584.00	SF	10.00	10.00	100	2024	2023		100	35,840	

BUILDING DIMENSIONS

BAS=[YR=2024;ORIG=80,12] W11 S2 S12 W20 N12 W4 N2 W12 S2 W3 S12 W4 W2 S4 W1 S10 E1 S4 E6 S8 E14 E30 E3 E4 E4 N9 E4 N17 W9 N5 N9 $
USP=[YR=2024;ORIG=30,-13] S22 S3 S2 E3 N2 E12 S2 E4 E20 N2 E11 N3 N22 W50 $
FUS=[YR=2024;ORIG=100,10] S17 E11 E12 S4 W2 S5 E21 N9 E11 N17 W20 N2 W14 S2 W19 $
FGR=[YR=2024;ORIG=73,76] E4 E4 E7 E12 S6 S34 W27 N40 $
FUS=[YR=2024;ORIG=110,44] E6 S5 E7 N5 E5 S5 E7 N5 E4 S5 E4 S17 W4 S5 W4 N5 W7 S5 W5 N5 W6 S5 W6 N5 W1 N7 W3 N3 E3 N7.1 N4.11 $
FOP=[YR=2024;ORIG=49,14] E20 S12 W20 N12 $

LAND DESCRIPTION

TOTAL OB/XF 85,265

LN	USE CODE	CLS	LAND USE DESCRIPTION	CAP	RD	LOC ZONE	FRONT	DEPTH	TOT LND UTS	UNIT TYPE	DT	DPTH FACT	% COND	TOT ADJ	UNIT PRICE	ADJ UNIT PRICE	LAND VALUE	OTHER ADJUSTMENTS AND NOTES	YEAR	DENSITY	DECL	FRZ	YR	CONSRV
1	000116	C	RES MARSH	100		RSF-1	0.00	0.00	1.00	LT		1.00	1.00	1.00	410,000.00	410,000.00	410,000							

REVIEW DATE 01/08/2024 BY DJ Total Acres: 0.00 Total Land Value: 410,000 Market: 0 Agricultural: 0 Common: 410,000 PRINTED 07/30/2025 BY SYS