LOT 19
MEADOWFIELD UNIT 1-A PB 6/148

MCTAGUE BRUCE/PAPARELLI JO ANN
86028 CREEKWOOD DR
YULEE, FL 32097

**2025**

**38-2N-27-1331-0019-0000**

## NASSAU COUNTY PROPERTY



## BUILDING CHARACTERISTICS

| ELEMENT | CD | CONSTRUCTION |
|---|---|---|
| Exterior Wall | 10 | ABOVE AVG 80 |
| Exterior Wall | 16 | WD FR STUC 20 |
| Roof Structur | 03 | GABLE/HIP 100 |
| Roof Cover | 03 | COMP SHNGL 100 |
| Interior Wall | 05 | DRYWALL 100 |
| Interior Floo | 14 | CARPET 80 |
| Interior Floo | 08 | SHT VINYL 20 |
| Air Condition | 03 | CENTRAL 100 |
| Heating Type | 04 | AIR DUCTED 100 |
| Bedrooms | | 3 100 |
| Bathrooms | | 2 100 |
| Frame | 02 | WOOD FRAME 100 |
| Stories | 1. | 1. 100 |
| Units | | 0 100 |
| Occupancy | 00 | NONE 100 |
| Quality | 01 | Quality Level 01 |

| | | | |
|---|---|---|---|
| DOR CODE | 0100 | SINGLE FAMILY | |
| MAP NUM | | MKT AREA | 04 |
| NEIGHBORHOOD/LOC | 4045.00 | | |

| AREA TYPE | TOTAL GROSS AREA | PCT OF BASE | YEAR | TOT ADJ AREA | SUBAREA MARKET VALUE |
|---|---|---|---|---|---|
| BAS | 2,219 | 100 | 2000 | 2,219 | 239,374 |
| FGR | 533 | 55 | 2000 | 293 | 31,607 |
| FOP | 60 | 30 | 2000 | 18 | 1,942 |
| FSP | 180 | 40 | 2000 | 72 | 7,767 |
| PTO | 396 | 5 | 2025 | 20 | 2,158 |
| TOTALS | 3,388 | | | 2,622 | 282,847 |

## MARKET ADJUSTMENTS

| TYPE | MDL | EFF. AREA | TOT ADJ PTS | EFF. BASE RATE | REPL. COST NEW | AYB | EYB | ECON | FNCT | | NORM | % COND |
|---|---|---|---|---|---|---|---|---|---|---|---|---|
| 0900 | 01 | 2,622 | 31.3 92.4480 | 122.03 | 319,963 | 2000 | 2000 | 0 | 0 | 0 | 11.60 | 88.40 |

1 SNGL FAM - 0% - 2025 Heated Area: 2219 HX Base Yr

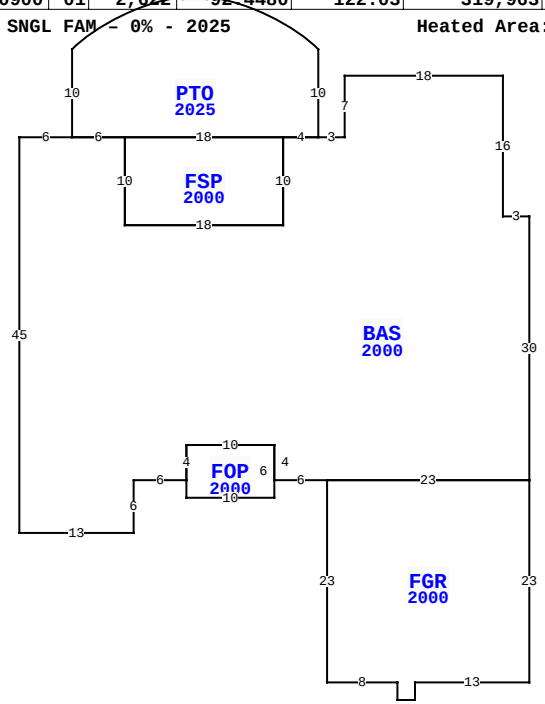


86028 CREEKWOOD DR, YULEE

| | | | |
|---|---|---|---|
| BLD DATE | | LGL DATE | |
| XF DATE | | LAND DATE | |
| INC DATE | | AG DATE | |

## NASSAU COUNTY PROPERTY — VALUATION SUMMARY

| | |
|---|---|
| VALUATION BY | STANDARD |
| Tax Group: 4 | Tax Dist: |
| BUILDING MARKET VALUE | 282,847 |
| TOTAL MARKET OB/XF VALUE | 4,961 |
| TOTAL LAND VALUE - MARKET | 65,000 |
| TOTAL MARKET VALUE | 352,808 |
| SOH/AGL Deduction | 0 |
| ASSESSED VALUE | 352,808 |
| TOTAL EXEMPTION VALUE | 0 |
| BASE TAXABLE VALUE | 352,808 |
| TOTAL JUST VALUE | 352,808 |
| NCON VALUE | 2,158 |
| INCOME VALUE | |
| PREVIOUS YEAR MKT VALUE | 337,401 |

| PERMIT NUM | DESCRIPTION | AMT | ISSUED |
|---|---|---|---|
| B07476 | NEW CONSTR | 121,476 | 08/01/2000 |

## SALES DATA

| OFF RECORD Number | DATE | TYPE INST | Q U | V I | RSN CD | SALE PRICE |
|---|---|---|---|---|---|---|
| 2753/1167 | 11/19/2024 | WD | Q | I | 01 | 440,000 |
| GRANTOR: PICKLER JUSTIN F & DE | | | | | | |
| GRANTEE: MCTAGUE BRUCE | | | | | | |
| 1558/1642 | 4/01/2008 | WD | Q | I | | 228,000 |
| GRANTOR: HAIGH JAMES E & ROBIN | | | | | | |
| GRANTEE: PICKLER JUSTIN F & | | | | | | |

## BUILDING NOTES

## BUILDING DIMENSIONS

BAS=[YR=2000;ORIG=0,0] W18 S7 W3 W4 S10 W18 N10 W6 W6 S45 E13 N6 E6 N4 E10 S4 E6 E23 N30 W3 N16 $
PTO=[YR=2025;ORIG=-49,7] E6 E18 E4 N10 W28F93 S10 $
FGR=[YR=2000;ORIG=-20,46] S23 E8 S2 E2 N2 E13 N23 W23 $
FSP=[YR=2000;ORIG=-25,7] W18 S10 E18 N10 $
FOP=[YR=2000;ORIG=-36,46] S2 E10 N6 W10 S4 $
.

## EXTRA FEATURES

| LN | OB/XF CODE | DESCRIPTION | BLD | CAP | L | W | UNITS | UT | Adj R | ADJ UNIT PRICE | ORIG COND | YEAR ON | YEAR ACTUAL | Q | % COND | OB/XF MKT VALUE | NOTES |
|---|---|---|---|---|---|---|---|---|---|---|---|---|---|---|---|---|---|
| 1 | 0811 | CONCRETE B | 0 | 0 | 0 | 0 | 1,239.00 | SF | 5.20 | 5.20 | 100 | 2000 | 2000 | 3 | 77 | 4,961 | |

## LAND DESCRIPTION

TOTAL OB/XF 4,961

| LN | USE CODE | CLS | LAND USE DESCRIPTION | CAP | RD | LOC ZONE | FRONT | DEPTH | TOT LND UTS | UNIT TYPE | DT | DPTH FACT | % COND | TOT ADJ | UNIT PRICE | ADJ UNIT PRICE | LAND VALUE | OTHER ADJUSTMENTS AND NOTES | YEAR | DENSITY | DECL | FRZ | YR | CONSRV |
|---|---|---|---|---|---|---|---|---|---|---|---|---|---|---|---|---|---|---|---|---|---|---|---|---|
| 1 | 000100 | C | RES | 0 | | RSF-1 | 0.00 | 0.00 | 1.00 | LT | | 1.00 | 1.00 | 1.00 | 65,000.00 | 65,000.00 | 65,000 | | | | | | | |

REVIEW DATE 05/20/2025 BY KW Total Acres: 0.00 Total Land Value: 65,000 Market: 0 Agricultural: 0 Common: 65,000 PRINTED 07/30/2025 BY SYS