LOT 3
IN OR 1292/113
MEADOWFIELD BLUFFS PB 5/105

MCDONOUGH JOHN P & MARTHA
86479 MEADOWFIELD BLUFFS RD
YULEE, FL 32097

2025

38-2N-27-1330-0003-0000

NASSAU COUNTY PROPERTY

BUILDING CHARACTERISTICS

ELEMENT	CD	CONSTRUCTION
Exterior Wall	20	FACE BRICK 70
Exterior Wall	30	VINYL 30
Roof Structur	03	GABLE/HIP 100
Roof Cover	03	COMP SHNGL 100
Interior Wall	05	DRYWALL 100
Interior Floo	14	CARPET 90
Interior Floo	12	HARDWOOD 10
Air Condition	03	CENTRAL 100
Heating Type	04	AIR DUCTED 100
Bedrooms		4 100
Bathrooms		3 100
Frame	02	WOOD FRAME 100
Stories	1.	1. 100
Units		0 100
Occupancy	00	NONE 100
Quality	04	Quality Level 04
DOR CODE	0100	SINGLE FAMILY
MAP NUM		MKT AREA 04
NEIGHBORHOOD/LOC	4056.00	

AREA TYPE	TOTAL GROSS AREA	PCT OF BASE	YEAR	TOT ADJ AREA	SUBAREA MARKET VALUE
BAS	2,334	100	1993	2,334	265,418
FGR	588	55	1993	323	36,731
FOP	36	30	1993	11	1,251
FSP	216	40	1993	86	9,779
TOTALS	3,174			2,754	313,180

MARKET ADJUSTMENTS

TYPE	MDL	EFF. AREA	TOT ADJ PTS	EFF. BASE RATE	REPL. COST NEW	AYB	EYB	ECON	FNCT		NORM	% COND
0900	01	2,754	110.4768	145.83	401,616	1990	1990	0	0	0	22.02	77.98

1 SNGL FAM – 100% - 2006 Heated Area: 2334 HX Base Yr 2006

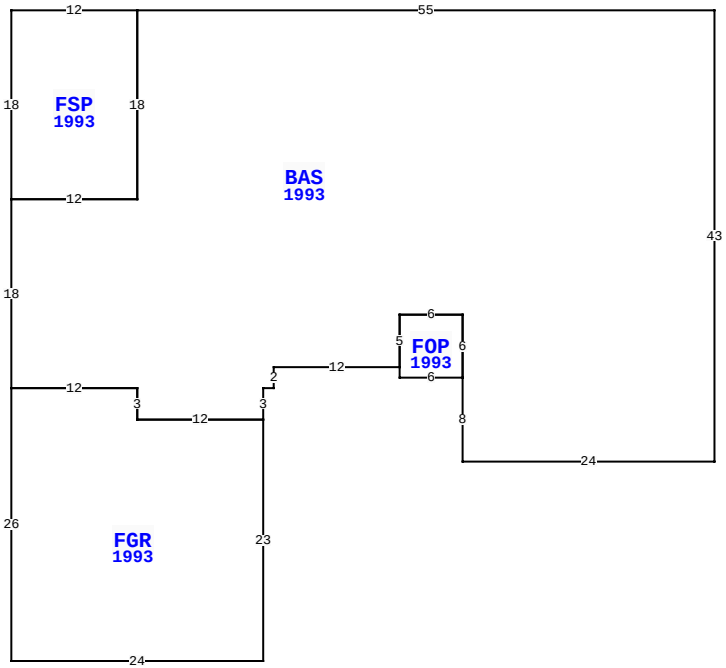

86479 MEADOWFIELD BLUFFS RD, YULEE

BLD DATE		LGL DATE	
XF DATE		LAND DATE	03/18/2024 MLU
INC DATE		AG DATE	

VALUATION SUMMARY

VALUATION BY		STANDARD
Tax Group: 4	Tax Dist:	
BUILDING MARKET VALUE		313,180
TOTAL MARKET OB/XF VALUE		15,135
TOTAL LAND VALUE - MARKET		225,000
TOTAL MARKET VALUE		553,315
SOH/AGL Deduction		218,058
ASSESSED VALUE		335,257
TOTAL EXEMPTION VALUE	HX HB	50,722
BASE TAXABLE VALUE		284,535
TOTAL JUST VALUE		553,315
NCON VALUE		0
INCOME VALUE		
PREVIOUS YEAR MKT VALUE		510,782

16X16 WD CRPT IS BOAT COVER

PERMIT NUM	DESCRIPTION	AMT	ISSUED
B25770	REPAIR/RRF	13,690	03/01/2012
6168	NEW CONSTR	116,832	12/15/1989

SALES DATA

OFF RECORD Number	DATE	TYPE INST	Q / U	V / I	RSN CD	SALE PRICE
1292/0113	2/01/2005	WD	Q	I		440,000
GRANTOR: JOHNSTON JANICE						
GRANTEE: MCDONOUGH JOHN P &						
0565/0386	3/14/1989	WD	Q	V		52,000
GRANTOR: SID HIGGINBOTHAM BLD						
GRANTEE: JOHNSTON DUELL & J						

BUILDING NOTES

BUILDING DIMENSIONS

BAS=[YR=1993;ORIG=0,0] W55 S18 W12 S18 E12 S3 E12 N3 E1 N2
E12 N5 E6 S6 S8 E24 N43 $
FGR=[YR=1993;ORIG=-67,36] S26 E24 N23 W12 N3 W12 $
FSP=[YR=1993;ORIG=-55,0] W12 S18 E12 N18 $
FOP=[YR=1993;ORIG=-30,34] S1 E6 N6 W6 S5 $
.

EXTRA FEATURES

LN	OB/XF CODE	DESCRIPTION	BLD	CAP	L	W	UNITS	UT	Adj R	ADJ UNIT PRICE	ORIG COND	YEAR ON	YEAR ACTUAL	Q	% COND	OB/XF MKT VALUE	NOTES
1	0811	CONCRETE B	0	100	0	0	1,031.00	SF	5.20	5.20	100	1990	1990	3	57	3,056	
2	1242	WD DECK A	0	100	0	0	355.00	SF	10.00	10.00	100	1990	1990	3	20	710	
3	0500	FP-PRE FAB	0	100	0	0	1.00	UT	3,500.00	3,500.00	100	1990	1990	3	66	2,310	
4	0858	SCULP CONC	0	100	63	3	189.00	SF	13.00	13.00	100	1990	1990	3	85	2,088	
5	0300	BOAT DCK W	0	100	0	0	260.00	SF	40.00	40.00	100	1998	1998	3	25	2,600	
6	0940	SHEDS/PORT	0	100	16	10	160.00	SF	30.00	30.00	100	2010	2010	3	40	1,920	
7	0475	VF 4 SBPL	0	100	0	0	103.00	LF	14.00	14.00	100	2010	2010	3	76	1,096	
8	0470	VNYL GATE	0	100	0	0	2.00	UT	300.00	300.00	100	2010	2010	3	76	456	
9	0350	CARPORT WD	0	100	16	16	256.00	SF	13.00	13.00	100	2007	2007	3	27	899	

LAND DESCRIPTION

TOTAL OB/XF 15,135

LN	USE CODE	CLS	LAND USE DESCRIPTION	CAP	RD	LOC ZONE	FRONT	DEPTH	TOT LND UTS	UNIT TYPE	DT	DPTH FACT	% COND	TOT ADJ	UNIT PRICE	ADJ UNIT PRICE	LAND VALUE	OTHER ADJUSTMENTS AND NOTES	YEAR	DENSITY	DECL	FRZ	YR	CONSRV
1	000131	C	RES CREEK	100	0006	RSF-1	0.00	0.00	1.00	LT		1.00	1.00	1.00	225,000.00	225,000.00	225,000							

REVIEW DATE 06/07/2024 BY KWA Total Acres: 0.00 Total Land Value: 225,000 Market: 0 Agricultural: 0 Common: 225,000 PRINTED 07/30/2025 BY SYS