LOT 53
IN OR 2233/924
LOFTON CREEK PB 6/33-36

SOK RANDALL C
86110 ST ANDREW CT
YULEE, FL 32097

2025

38-2N-27-127C-0053-0000

NASSAU COUNTY PROPERTY

BUILDING CHARACTERISTICS

ELEMENT	CD	CONSTRUCTION
Exterior Wall	05	AVERAGE 100
Roof Structur	03	GABLE/HIP 100
Roof Cover	03	COMP SHNGL 100
Interior Wall	05	DRYWALL 100
Interior Floo	14	CARPET 80
Interior Floo	08	SHT VINYL 20
Air Condition	03	CENTRAL 100
Heating Type	04	AIR DUCTED 100
Bedrooms		3 100
Bathrooms		2 100
Frame	02	WOOD FRAME 100
Stories	1.	1. 100
Units		0 100
Occupancy	00	NONE 100
Quality	05	Quality Level 05

DOR CODE 0100 SINGLE FAMILY
MAP NUM | MKT AREA 04
NEIGHBORHOOD/LOC 4046.00

AREA TYPE	TOTAL GROSS AREA	PCT OF BASE	YEAR	TOT ADJ AREA	SUBAREA MARKET VALUE
BAS	1,346	100	1996	1,346	139,195
FEP	294	80	2002	235	24,303
FGR	399	55	1996	219	22,648
FOP	16	30	1996	5	518
PTO	126	5	2001	6	620
TOTALS	2,181			1,811	187,282

MARKET ADJUSTMENTS

TYPE	MDL	EFF. AREA	TOT ADJ PTS	EFF. BASE RATE	REPL. COST NEW	AYB	EYB	ECON	FNCT		NORM	% COND
0100	01	1,811	119.9000	119.90	217,139	1996	1996	0	0	0	13.75	86.25

1 SINGLE FAM – 100% - 2019 Heated Area: 1346 HX Base Yr 2019

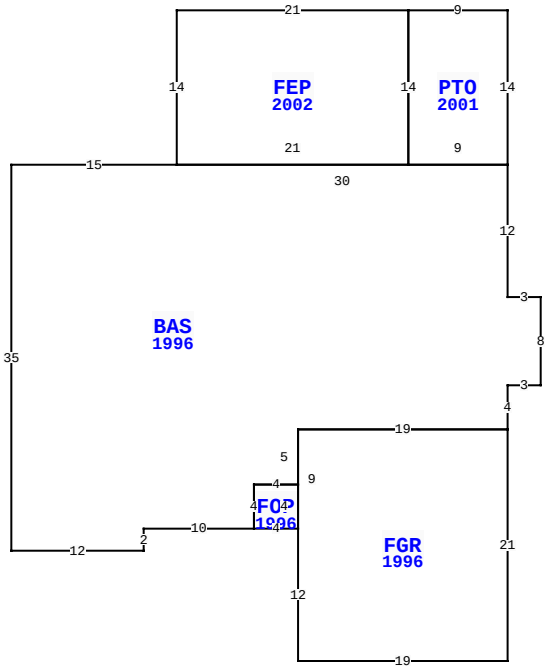

86110 ST ANDREW CT, YULEE

BLD DATE	05/10/2022 NW	LGL DATE	
XF DATE		LAND DATE	04/30/2025 MLU
INC DATE		AG DATE	

VALUATION SUMMARY

VALUATION BY		STANDARD
Tax Group: 4	Tax Dist:	
BUILDING MARKET VALUE		187,282
TOTAL MARKET OB/XF VALUE		5,764
TOTAL LAND VALUE - MARKET		55,000
TOTAL MARKET VALUE		248,046
SOH/AGL Deduction		88,339
ASSESSED VALUE		159,707
TOTAL EXEMPTION VALUE	HX HB	50,722
BASE TAXABLE VALUE		108,985
TOTAL JUST VALUE		248,046
NCON VALUE		0
INCOME VALUE		
PREVIOUS YEAR MKT VALUE		271,851

PERMIT NUM	DESCRIPTION	AMT	ISSUED
B017917	NEW CONSTR	2,099	02/01/2002
962932	NEW CONSTR	65,913	07/16/1996

SALES DATA

OFF RECORD Number	DATE	TYPE INST	Q U	V I	RSN CD	SALE PRICE
2233/0924	10/26/2018	WD	Q	I	01	218,000
GRANTOR: MACIAS JOSE REFUGIO						
GRANTEE: SOK RANDALL C						
2073/0641	9/20/2016	QC	U	I	11	100
GRANTOR: SOLORIO MARIA DE LOUR						
GRANTEE: MACIAS JOSE REFUGIO						

BUILDING NOTES

BUILDING DIMENSIONS

PTO=[YR=2001] W9 FEP=[YR=2002] W21 S14 BAS=[YR=1996] W15 S35 E12 N2 E10 FOP=[YR=1996] E4 FGR=[YR=1996] S12 E19 N21 W19 S9 $ N4 W4 S4 $ N4 E4 N5 E19 N4 E3 N8 W3 N12 W30 $ E21 N14 $ S14 E9 N14 $.

EXTRA FEATURES

LN	OB/XF CODE	DESCRIPTION	BLD	CAP	L	W	UNITS	UT	Adj R	ADJ UNIT PRICE	ORIG COND	YEAR ON	YEAR ACTUAL	Q	% COND	OB/XF MKT VALUE	NOTES
1	0811	CONCRETE B	0	100	0	0	843.00	SF	5.20	5.20	100	1996	1996	3	70	3,069	
2	0500	FP-PRE FAB	0	100	0	0	1.00	UT	3,500.00	3,500.00	100	1996	1996	3	77	2,695	

LAND DESCRIPTION

TOTAL OB/XF 5,764

LN	USE CODE	CLS	LAND USE DESCRIPTION	CAP	RD	LOC ZONE	FRONT	DEPTH	TOT LND UTS	UNIT TYPE	DT	DPTH FACT	% COND	TOT ADJ	UNIT PRICE	ADJ UNIT PRICE	LAND VALUE	OTHER ADJUSTMENTS AND NOTES	YEAR	DENSITY	DECL	FRZ	YR	CONSRV
1	000134	C	RES POND	100			0.00	0.00	1.00	LT		1.00	1.00	1.00	55,000.00	55,000.00	55,000							

REVIEW DATE 05/12/2019 BY KBA Total Acres: 0.00 Total Land Value: 55,000 Market: 0 Agricultural: 0 Common: 55,000 PRINTED 07/30/2025 BY SYS