LOT 6
MINER PINES OR 2471/1190

THE MILLER REVOCABLE LIVING TRUST/MILLER KERI TRUS
85961 MINER PINES CT
YULEE, FL 32097

2025

38-2N-27-0585-0006-0000

BUILDING CHARACTERISTICS

ELEMENT	CD	CONSTRUCTION
Exterior Wall	31	HARDIE BRD 100
Roof Structur	08	IRREGULAR 100
Roof Cover	03	COMP SHNGL 100
Interior Wall	05	DRYWALL 100
Interior Floo	11	CLAY TILE 60
Interior Floo	12	HARDWOOD 40
Air Condition	03	CENTRAL 100
Heating Type	04	AIR DUCTED 100
Bedrooms		5 100
Bathrooms		3.5 100
Frame	02	WOOD FRAME 100
Stories	1.	1. 100
Units		1 100
Quality	05	Quality Level 05
DOR CODE	0100	SINGLE FAMILY
MAP NUM		MKT AREA 04
NEIGHBORHOOD/LOC	4053.00	

AREA TYPE	TOTAL GROSS AREA	PCT OF BASE	YEAR	TOT ADJ AREA	SUBAREA MARKET VALUE
BAS	1,595	100	2024	1,595	259,522
FGR	670	55	2024	368	59,877
FOP	120	30	2024	36	5,858
FSP	145	40	2024	58	9,437
FUS	1,073	100	2024	1,073	174,588
PTO	600	5	2025	30	4,881
STR	45	10	2024	4	651
UOP	150	20	2025	30	4,881
TOTALS	4,398			3,194	519,696

MARKET ADJUSTMENTS

TYPE	MDL	EFF. AREA	TOT ADJ PTS	EFF. BASE RATE	REPL. COST NEW	AYB	EYB	ECON	FNCT		NORM	% COND
0900	01	3,194	123.2616	162.71	519,696	2023	2023	0	0	0	0.00	100.00

1 SNGL FAM – 100% - 2024 Heated Area: 2668 HX Base Yr 2024

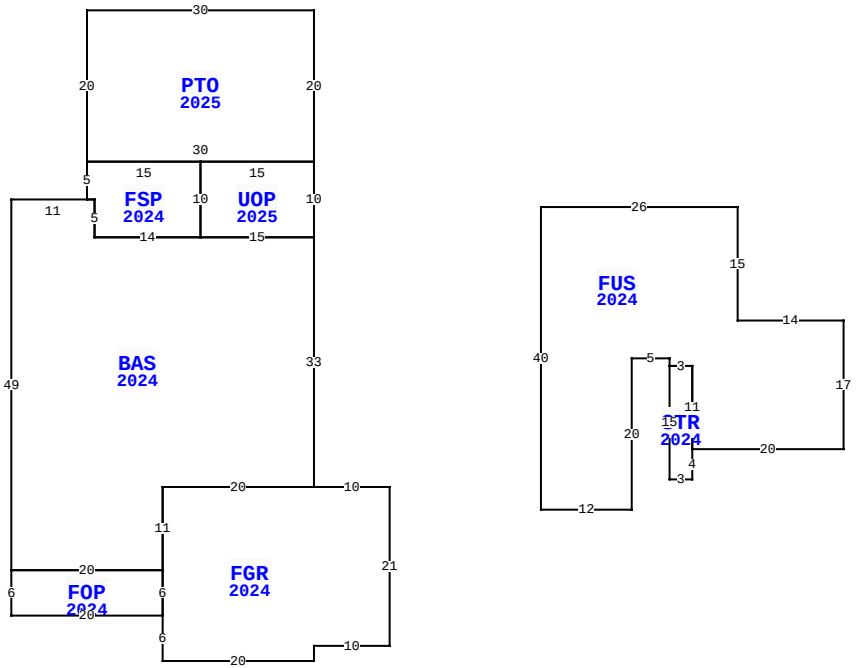

85961 MINER PINES CT, YULEE

BLD DATE		LGL DATE	
XF DATE		LAND DATE	
INC DATE		AG DATE	

NASSAU COUNTY PROPERTY

PAGE 1 of 1 4

VALUATION SUMMARY

VALUATION BY		STANDARD
Tax Group: 4	Tax Dist:	
BUILDING MARKET VALUE		519,696
TOTAL MARKET OB/XF VALUE		24,464
TOTAL LAND VALUE - MARKET		85,000
TOTAL MARKET VALUE		629,160
SOH/AGL Deduction		16,271
ASSESSED VALUE		612,889
TOTAL EXEMPTION VALUE	HX HB	50,722
BASE TAXABLE VALUE		562,167
TOTAL JUST VALUE		629,160
NCON VALUE		21,805
INCOME VALUE		
PREVIOUS YEAR MKT VALUE		574,426

PERMIT NUM	DESCRIPTION	AMT	ISSUED
B240006073	30 X 30 SCREEN EN	12,500	05/20/2024
230004539	CO		04/06/2023
22007929	NEW CONSTR	427,215	05/20/2022

SALES DATA

OFF RECORD Number	DATE	TYPE INST	Q / U	V / I	RSN CD	SALE PRICE
2630/1976	4/07/2023	WD	Q	I	01	700,300

GRANTOR: NEW ATLANTIC BUILDERS
GRANTEE: THE MILLER REVOCABL

BUILDING NOTES

EXTRA FEATURES

LN	OB/XF CODE	DESCRIPTION	BLD	CAP	L	W	UNITS	UT	Adj R	ADJ UNIT PRICE	ORIG COND	YEAR ON	YEAR ACTUAL	Q	% COND	OB/XF MKT VALUE	NOTES
1	0811	CONCRETE B	0	100	0	0	2,397.00	SF	5.20	5.20	100	2024	2023		100	12,464	
2	0912	SCRN RM G	0	100	30	20	600.00	SF	20.00	20.00	100	2025	2024		100	12,000	

BUILDING DIMENSIONS

BAS=[YR=2024;ORIG=10,10] E11 S5 E14 E15 S33 W20 S11 W20 N49 $
FUS=[YR=2024;ORIG=80,11] E26 S15 E14 S17 W20 N11 W3 N1 W5 S20 W12 N40 $
FGR=[YR=2024;ORIG=30,48] E20 E10 S21 W10 S2 W20 N6 N6 N11 $
PTO=[YR=2025;ORIG=20,5] E30 N20 W30 S20 $
UOP=[YR=2025;ORIG=35,5] E15 S10 W15 N10 $
FSP=[YR=2024;ORIG=20,5] E15 S10 W14 N5 W1 N5 $
FOP=[YR=2024;ORIG=10,59] E20 S6 W20 N6 $
STR=[YR=2024;ORIG=97,32] E3 S11 S4 W3 N15 $
.

LAND DESCRIPTION

TOTAL OB/XF 24,464

LN	USE CODE	CLS	LAND USE DESCRIPTION	CAP	RD	LOC ZONE	FRONT	DEPTH	TOT LND UTS	UNIT TYPE	DT	DPTH FACT	% COND	TOT ADJ	UNIT PRICE	ADJ UNIT PRICE	LAND VALUE	OTHER ADJUSTMENTS AND NOTES	YEAR	DENSITY	DECL	FRZ	YR	CONSRV
1	000134	C	RES POND	100		OR	0.00	0.00	1.00	LT		1.00	1.00	1.00	85,000.00	85,000.00	85,000							

REVIEW DATE 12/17/2024 BY KW Total Acres: 0.00 Total Land Value: 85,000 Market: 0 Agricultural: 0 Common: 85,000 PRINTED 07/30/2025 BY SYS