LOTS 9 & 10
ESMT PT OR 923/1099
FUGATES LANDING PB 5/108

MATHEWS FAMILY TRUST/MATHEWS EDWARD E TRUSTEE
85322 MINER ROAD
YULEE, FL 32097

2025

38-2N-27-0580-0009-0000

BUILDING CHARACTERISTICS

ELEMENT	CD	CONSTRUCTION
Exterior Wall	19	COMMON BRK 100
Roof Structur	03	GABLE/HIP 100
Roof Cover	03	COMP SHNGL 100
Interior Wall	05	DRYWALL 100
Interior Floo	11	CLAY TILE 60
Interior Floo	14	CARPET 40
Air Condition	03	CENTRAL 100
Heating Type	04	AIR DUCTED 100
Bedrooms		3 100
Bathrooms		3 100
Frame	03	MASONRY 100
Stories	1.	1. 100
Units		0 100
Occupancy	00	NONE 100
Quality	04	Quality Level 04

DOR CODE	0100	SINGLE FAMILY	
MAP NUM		MKT AREA	04
NEIGHBORHOOD/LOC	4053.00		

AREA TYPE	TOTAL GROSS AREA	PCT OF BASE	YEAR	TOT ADJ AREA	SUBAREA MARKET VALUE
BAS	827	100	1998	827	117,030
BAS	1,973	100	1998	1,973	279,201
FCP	200	25	1998	50	7,076
FGR	676	55	1998	372	52,642
FOP	96	30	1998	29	4,104
FOP	192	30	1998	58	8,208
PTO	323	5	1998	16	2,264
STP	24	10	2006	2	283
TOTALS	4,311			3,327	470,807

MARKET ADJUSTMENTS

TYPE	MDL	EFF. AREA	TOT ADJ PTS	EFF. BASE RATE	REPL. COST NEW	AYB	EYB	ECON	FNCT		NORM	% COND
0900	01	3,327	125.3868	165.51	550,652	1998	2008	0	0	0	14.50	85.50

1 SNGL FAM – 100% - 1999 Heated Area: 2800 HX Base Yr 1999

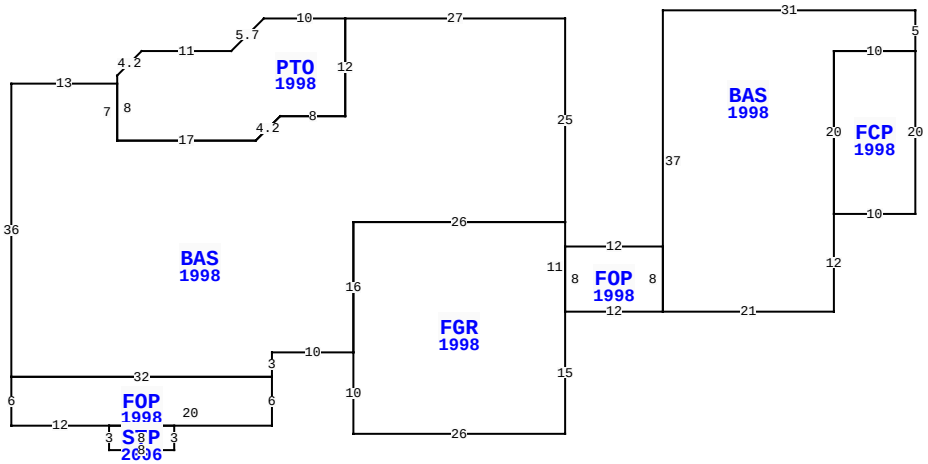

85332 MINER RD, YULEE

BLD DATE		LGL DATE	
XF DATE		LAND DATE	
INC DATE		AG DATE	

NASSAU COUNTY PROPERTY

PAGE 1 of 1 4

VALUATION SUMMARY

VALUATION BY		STANDARD
Tax Group: 4	Tax Dist:	
BUILDING MARKET VALUE		470,807
TOTAL MARKET OB/XF VALUE		13,485
TOTAL LAND VALUE - MARKET		392,700
TOTAL MARKET VALUE		876,992
SOH/AGL Deduction		544,535
ASSESSED VALUE		332,457
TOTAL EXEMPTION VALUE	HX HB	50,722
BASE TAXABLE VALUE		281,735
TOTAL JUST VALUE		876,992
NCON VALUE		0
INCOME VALUE		
PREVIOUS YEAR MKT VALUE		833,681

PERMIT NUM	DESCRIPTION	AMT	ISSUED
E22269	ELEC OTHER	35,000	11/01/2009
P14036	OTHER	5,000	11/01/2009
E985173	TEMP POLE	1,500	09/01/1998
B9805228	NEW CONSTR	165,000	08/04/1998

SALES DATA

OFF RECORD Number	DATE	TYPE INST	Q U	V I	RSN CD	SALE PRICE
2625/0959	3/14/2023	WD	U	I	11	100
GRANTOR: MATHEWS EDWARD E & JO						
GRANTEE: MATHEWS FAMILY TRUS						
0777/1299	11/22/1996	WD	U	V	09	85,000
GRANTOR: WELDON JACQUELINE M						
GRANTEE: MATHEWS EDWARD E &						

BUILDING NOTES

BUILDING DIMENSIONS

BAS=[YR=1998] W27 PTO=[YR=1998] W10 L4 D4 W11 D3 L3 S8 E17 U3 R3 E8 N12$ S12 W8 L3 D3 W17 N7 W13 S36 FOP=[YR=1998] S6 E12 STP=[YR=2006] S3 E8 N3 W8$ E20 N6 W32$ E32 N3 E10 FGR=[YR=1998] S10 E26 N15 FOP=[YR=1998] E12 BAS=[YR=1998] E21 N12 FCP=[YR=1998] E10 N20 W10 S20$ N20 E10 N5 W31 S37$ N8 W12 S8$ N11 W26 S16$ N16 E26 N25$.

EXTRA FEATURES

LN	OB/XF CODE	DESCRIPTION	BLD	CAP	L	W	UNITS	UT	Adj R	ADJ UNIT PRICE	ORIG COND	YEAR ON	YEAR ACTUAL	Q	% COND	OB/XF MKT VALUE	NOTES
1	0810	CONCRETE A	0	100	0	0	528.00	SF	6.50	6.50	100	1998	1998	3	73	2,505	
2	0820	WOOD WALK	0	100	75	4	300.00	SF	11.75	11.75	100	1997	1997	3	40	1,410	
3	1242	WD DECK A	0	100	13	10	130.00	SF	10.00	10.00	100	1997	1997	3	20	260	
4	0504	FP-ELECTRI	0	100	0	0	1.00	UT	2,000.00	2,000.00	100	1998	1998	3	80	1,600	
5	0681	POLE SHED	0	100	20	10	200.00	SF	15.00	15.00	100	1998	1998	3	25	750	
6	0351	CARPORT MT	0	100	40	16	640.00	SF	10.00	10.00	100	2006	2006	3	24	1,536	
7	0300	BOAT DCK W	0	100	0	0	339.00	SF	40.00	40.00	100	2006	2006	3	40	5,424	

LAND DESCRIPTION

TOTAL OB/XF 13,485

LN	USE CODE	CLS	LAND USE DESCRIPTION	CAP	RD	LOC ZONE	FRONT	DEPTH	TOT LND UTS	UNIT TYPE	DT	DPTH FACT	% COND	TOT ADJ	UNIT PRICE	ADJ UNIT PRICE	LAND VALUE	OTHER ADJUSTMENTS AND NOTES	YEAR	DENSITY	DECL	FRZ	YR	CONSRV
1	000116	C	RES MARSH	100	0006	OR	0.00	0.00	4.62	AC		1.00	1.00	1.00	85,000.00	85,000.00	392,700							

REVIEW DATE 08/17/2020 BY NWA Total Acres: 4.62 Total Land Value: 392,700 Market: 0 Agricultural: 0 Common: 392,700 PRINTED 07/30/2025 BY SYS