LOT 720
IN OR 2185/104
HERON ISLES PHASE THREE C

KOMACK CHRISTOPHER & HEIDI/KALCEVIC SUSAN
96014 SHALLOWTAIL LANE
YULEE, FL 32097

2025

37-3N-28-0745-0720-0000

NASSAU COUNTY PROPERTY

BUILDING CHARACTERISTICS

ELEMENT	CD	CONSTRUCTION
Exterior Wall	16	WD FR STUC 100
Roof Structur	03	GABLE/HIP 100
Roof Cover	03	COMP SHNGL 100
Interior Wall	05	DRYWALL 100
Interior Floo	14	CARPET 70
Interior Floo	11	CLAY TILE 30
Air Condition	03	CENTRAL 100
Heating Type	04	AIR DUCTED 100
Bedrooms		6 100
Bathrooms		4 100
Frame	02	WOOD FRAME 100
Stories	2.	2. 100
Units		0 100
Occupancy	00	NONE 100
Quality	04	Quality Level 04
DOR CODE	0100	SINGLE FAMILY
MAP NUM		MKT AREA 04
NEIGHBORHOOD/LOC	4038.00	

AREA TYPE	TOTAL GROSS AREA	PCT OF BASE	YEAR	TOT ADJ AREA	SUBAREA MARKET VALUE
BAS	2,335	100	2018	2,335	251,387
FGR	380	55	2018	209	22,501
FOP	50	30	2018	15	1,615
FSP	120	40	2018	48	5,168
FUS	470	100	2018	470	50,600
PTO	90	5	2018	4	431
STR	24	10	2018	2	215
TOTALS	3,469			3,083	331,917

MARKET ADJUSTMENTS

TYPE	MDL	EFF. AREA	TOT ADJ PTS	EFF. BASE RATE	REPL. COST NEW	AYB	EYB	ECON	FNCT		NORM	% COND
0100	01	3,083	110.9934	110.99	342,182	2018	2018	0	0	0	3.00	97.00

1 SINGLE FAM – 100% - 2019 Heated Area: 2805 HX Base Yr 2019

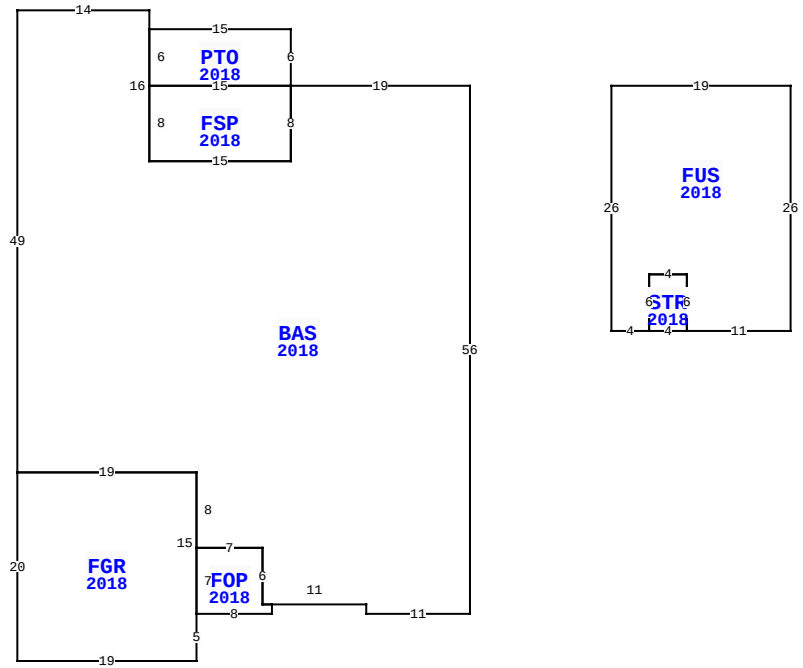

96014 SHALLOWTAIL LN, YULEE

BLD DATE		LGL DATE	
XF DATE		LAND DATE	05/13/2025 MLU
INC DATE		AG DATE	

NASSAU COUNTY PROPERTY — VALUATION SUMMARY

VALUATION BY		STANDARD
Tax Group: 4	Tax Dist:	
BUILDING MARKET VALUE		331,917
TOTAL MARKET OB/XF VALUE		3,364
TOTAL LAND VALUE - MARKET		65,000
TOTAL MARKET VALUE		400,281
SOH/AGL Deduction		169,648
ASSESSED VALUE		230,633
TOTAL EXEMPTION VALUE	HX HB	50,722
BASE TAXABLE VALUE		179,911
TOTAL JUST VALUE		400,281
NCON VALUE		0
INCOME VALUE		
PREVIOUS YEAR MKT VALUE		390,398

PERMIT NUM	DESCRIPTION	AMT	ISSUED
C1708507	CO ISSUED	0	03/21/2018
B1708507	NEW CONSTR	339,765	09/26/2017

SALES DATA

OFF RECORD Number	DATE	TYPE INST	Q U	V I	RSN CD	SALE PRICE
2185/0104	3/20/2018	WD	Q	I	02	275,800
GRANTOR: DREAM FINDERS HOMES L						
GRANTEE: KOMACK CHRISTOPHER						
2144/0579	8/29/2017	WD	Q	V	05	168,000
GRANTOR: HERON ISLES JOINT VEN						
GRANTEE: DREAM FINDERS HOMES						

BUILDING NOTES

BUILDING DIMENSIONS

BAS=[YR=2018] W19 PTO=[YR=2018] N6 W15 S6 FSP=[YR=2018] S8 E15 N8 W15$ E15$ S8 W15 N16 W14 S49 FGR=[YR=2018] S20 E19 N5 FOP=[YR=2018] E8 N1 W1 N6 W7 S7$ N15 W19$ E19 S8 E7 S6 E11 S1 E11 N56$ PTR=E15 FUS=[YR=2018] E19 S26W11 STR=[YR=2018] W4 N6 E4 S6 $ N6 W4 S6 W4 N26$ W15$.

EXTRA FEATURES

LN	OB/XF CODE	DESCRIPTION	BLD	CAP	L	W	UNITS	UT	Adj R	ADJ UNIT PRICE	ORIG COND	YEAR ON	YEAR ACTUAL	Q	% COND	OB/XF MKT VALUE	NOTES
1	0811	CONCRETE B	0	100	0	0	592.00	SF	5.20	5.20	100	2018	2018	3	97	2,986	
2	0810	CONCRETE A	0	100	0	0	60.00	SF	6.50	6.50	100	2018	2018	3	97	378	

LAND DESCRIPTION

TOTAL OB/XF 3,364

LN	USE CODE	CLS	LAND USE DESCRIPTION	CAP	RD	LOC ZONE	FRONT	DEPTH	TOT LND UTS	UNIT TYPE	DT	DPTH FACT	% COND	TOT ADJ	UNIT PRICE	ADJ UNIT PRICE	LAND VALUE	OTHER ADJUSTMENTS AND NOTES	YEAR	DENSITY	DECL	FRZ	YR	CONSRV
1	000100	C	RES	100		PUD	0.00	0.00	1.00	LT		1.00	1.00	1.00	65,000.00	65,000.00	65,000							

REVIEW DATE 01/25/2019 BY DJ Total Acres: 0.00 Total Land Value: 65,000 Market: 0 Agricultural: 0 Common: 65,000 PRINTED 07/30/2025 BY SYS