LOT 25
IN OR 2139/1797
BELLS RIVER ESTATES #3

HOLLAND GREGORY W & LENNY Y
97061 OVERTON COURT
YULEE, FL 32097

2025

37-3N-27-0136-0025-0000

NASSAU COUNTY PROPERTY

BUILDING CHARACTERISTICS

ELEMENT	CD	CONSTRUCTION
Exterior Wall	15	CONC BLOCK 50
Exterior Wall	16	WD FR STUC 50
Roof Structur	03	GABLE/HIP 100
Roof Cover	03	COMP SHNGL 100
Interior Wall	05	DRYWALL 100
Interior Floo	14	CARPET 70
Interior Floo	08	SHT VINYL 30
Air Condition	03	CENTRAL 100
Heating Type	04	AIR DUCTED 100
Bedrooms		3 100
Bathrooms		2 100
Frame	02	WOOD FRAME 100
Stories	2.	2. 100
Units		0 100
Occupancy	00	NONE 100
Quality	03	Quality Level 03
DOR CODE	0100	SINGLE FAMILY
MAP NUM		MKT AREA 04
NEIGHBORHOOD/LOC	4062.00	

AREA TYPE	TOTAL GROSS AREA	PCT OF BASE	YEAR	TOT ADJ AREA	SUBAREA MARKET VALUE
BAS	1,340	100	2007	1,340	112,801
FGR	420	55	2007	231	19,446
FOP	18	30	2007	5	421
FSP	180	40	2007	72	6,061
FUS	1,406	100	2007	1,406	118,357
TOTALS	3,364			3,054	257,086

MARKET ADJUSTMENTS

TYPE	MDL	EFF. AREA	TOT ADJ PTS	EFF. BASE RATE	REPL. COST NEW	AYB	EYB	ECON	FNCT		NORM	% COND
0100	01	3,054	92.0000	92.00	280,968	2007	2007	0	0	0	8.50	91.50

1 SINGLE FAM – 100% - 2018 Heated Area: 2746 HX Base Yr 2018

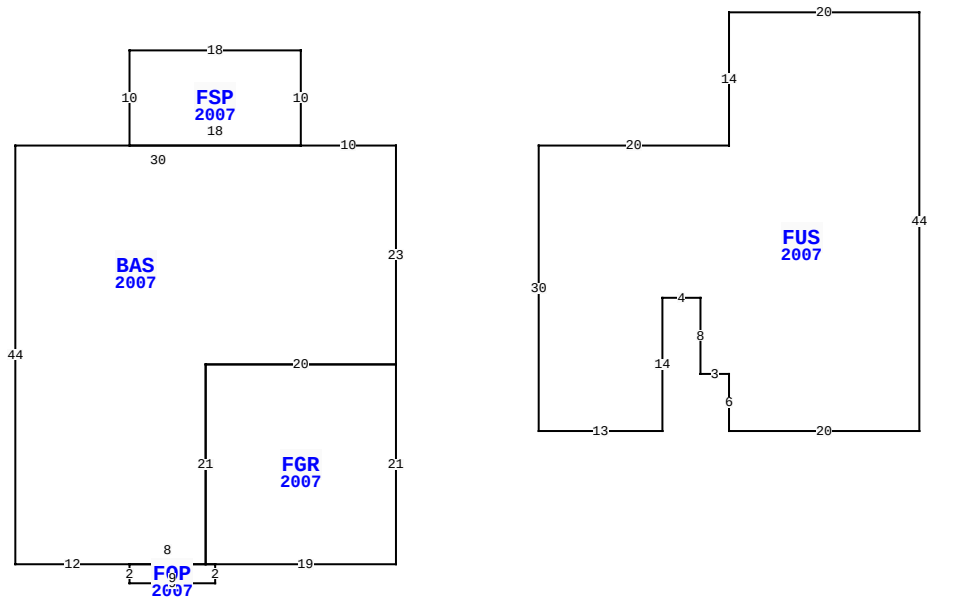

97061 OVERTON CT, YULEE

BLD DATE	01/14/2008 KK	LGL DATE	
XF DATE		LAND DATE	04/22/2025 MLU
INC DATE		AG DATE	

NASSAU COUNTY PROPERTY — VALUATION SUMMARY

VALUATION BY		STANDARD
Tax Group: 4	Tax Dist:	
BUILDING MARKET VALUE		257,086
TOTAL MARKET OB/XF VALUE		3,804
TOTAL LAND VALUE - MARKET		65,000
TOTAL MARKET VALUE		325,890
SOH/AGL Deduction		135,221
ASSESSED VALUE		190,669
TOTAL EXEMPTION VALUE	HX HB	50,722
BASE TAXABLE VALUE		139,947
TOTAL JUST VALUE		325,890
NCON VALUE		0
INCOME VALUE		
PREVIOUS YEAR MKT VALUE		294,413

PERMIT NUM	DESCRIPTION	AMT	ISSUED
B19922	ADDITION	2,500	05/01/2007
C18375	CO ISSUED	0	08/01/2006
B18375	NEW CONSTR	197,946	08/01/2006
E17862	ELEC OTHER	2,000	08/01/2006
M11915	MECH OTHER	0	08/01/2006
P11456	OTHER	0	08/01/2006

SALES DATA

OFF RECORD Number	DATE	TYPE INST	Q U /	V I /	RSN CD	SALE PRICE
2139/1797	8/11/2017	WD	Q	I	02	220,000
GRANTOR: CHAFIN SHAWN M & HEAT						
GRANTEE: HOLLAND GREGORY W &						
1620/0784	5/18/2009	WD	Q	I	01	189,900
GRANTOR: MARONDA HOMES INC						
GRANTEE: CHAFIN SHAWN M						

BUILDING NOTES

BUILDING DIMENSIONS

BAS=[YR=2007] W10 FSP=[YR=2007] N10 W18 S10 E18$ W30 S44 E12 FOP=[YR=2007] S2 E9 N2 FGR=[YR=2007] E19 N21 W20 S21 E1$ W9$ E8 N21 E20 N23$ PTR=E15 FUS=[YR=2007] E20N14 E20 S44 W20 N6 W3 N8 W4 S14 W13 N30$ W15$.

EXTRA FEATURES

LN	OB/XF CODE	DESCRIPTION	BLD	CAP	L	W	UNITS	UT	Adj R	ADJ UNIT PRICE	ORIG COND	YEAR ON	YEAR ACTUAL	Q	% COND	OB/XF MKT VALUE	NOTES
1	0811	CONCRETE B	0	100	0	0	797.00	SF	5.20	5.20	100	2007	2007	3	87	3,606	
2	0810	CONCRETE A	0	100	0	0	35.00	SF	6.50	6.50	100	2007	2007	3	87	198	

LAND DESCRIPTION

TOTAL OB/XF 3,804

LN	USE CODE	CLS	LAND USE DESCRIPTION	CAP	RD	LOC ZONE	FRONT	DEPTH	TOT LND UTS	UNIT TYPE	DT	DPTH FACT	% COND	TOT ADJ	UNIT PRICE	ADJ UNIT PRICE	LAND VALUE	OTHER ADJUSTMENTS AND NOTES	YEAR	DENSITY	DECL	FRZ	YR	CONSRV
1	000100	C	RES	100	0003	PUD	0.00	0.00	1.00	LT		1.00	1.00	1.00	65,000.00	65,000.00	65,000							

REVIEW DATE 05/12/2019 BY KBA Total Acres: 0.00 Total Land Value: 65,000 Market: 0 Agricultural: 0 Common: 65,000 PRINTED 07/30/2025 BY SYS