LOT 24
IN OR 1736/1055
BELLS RIVER ESTATES #3

HORNER JEFFREY & JUDY L
97067 OVERTON CT
YULEE, FL 32097

2025

37-3N-27-0136-0024-0000

BUILDING CHARACTERISTICS

ELEMENT	CD	CONSTRUCTION
Exterior Wall	15	CONC BLOCK 50
Exterior Wall	16	WD FR STUC 50
Roof Structur	03	GABLE/HIP 100
Roof Cover	03	COMP SHNGL 100
Interior Wall	05	DRYWALL 100
Interior Floo	14	CARPET 80
Interior Floo	08	SHT VINYL 20
Air Condition	03	CENTRAL 100
Heating Type	04	AIR DUCTED 100
Bedrooms		5 100
Bathrooms		2.5 100
Frame	03	MASONRY 100
Stories	2.	2. 100
Units		0 100
Occupancy	00	NONE 100
Quality	03	Quality Level 03
DOR CODE	0100	SINGLE FAMILY
MAP NUM		MKT AREA 04
NEIGHBORHOOD/LOC	4062.00	

AREA TYPE	TOTAL GROSS AREA	PCT OF BASE	YEAR	TOT ADJ AREA	SUBAREA MARKET VALUE
BAS	1,256	100	2007	1,256	107,845
FGR	560	55	2007	308	26,446
FOP	24	30	2007	7	601
FSP	180	40	2007	72	6,182
FUS	1,610	100	2007	1,610	138,240
TOTALS	3,630			3,253	279,315

MARKET ADJUSTMENTS

TYPE	MDL	EFF. AREA	TOT ADJ PTS	EFF. BASE RATE	REPL. COST NEW	AYB	EYB	ECON	FNCT		NORM	% COND
0100	01	3,253	93.8400	93.84	305,262	2007	2007	0	0	0	8.50	91.50

1 SINGLE FAM – 100% - 2012 Heated Area: 2866 HX Base Yr 2012

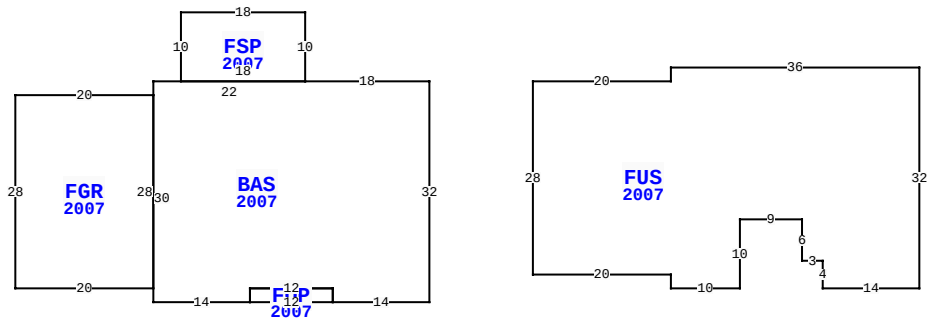

97067 OVERTON CT, YULEE

BLD DATE		LGL DATE	
XF DATE		LAND DATE	04/22/2025 MLU
INC DATE		AG DATE	

NASSAU COUNTY PROPERTY

PAGE 1 of 1 4

VALUATION SUMMARY

VALUATION BY		STANDARD
Tax Group: 4	Tax Dist:	
BUILDING MARKET VALUE		279,315
TOTAL MARKET OB/XF VALUE		57,504
TOTAL LAND VALUE - MARKET		65,000
TOTAL MARKET VALUE		401,819
SOH/AGL Deduction		212,665
ASSESSED VALUE		189,154
TOTAL EXEMPTION VALUE	HX HB	50,722
BASE TAXABLE VALUE		138,432
TOTAL JUST VALUE		401,819
NCON VALUE		0
INCOME VALUE		
PREVIOUS YEAR MKT VALUE		371,171

ALSO OWNS VACANT LOT 23 @ 97070

PERMIT NUM	DESCRIPTION	AMT	ISSUED
21007670	SCRN ENCL	17,000	06/14/2021
B1632777	SWIM POOL	0	08/02/2016
B19923	ADDITION	3,000	05/01/2007
C18373	CO ISSUED	229,680	08/01/2006
B18373	NEW CONSTR	229,680	08/01/2006
E17860	ELEC OTHER	2,000	08/01/2006

SALES DATA

OFF RECORD Number	DATE	TYPE INST	Q / U	V / I	RSN CD	SALE PRICE
1736/1055	4/08/2011	WD	U	I	11	95,000
GRANTOR: BAC HOME LOANS SERVIC						
GRANTEE: HORNER JEFFREY & JU						
1736/1053	3/23/2011	QC	U	I	11	100
GRANTOR: FEDERAL NATIONAL MORT						
GRANTEE: BAC HOME LOANS SERV						

BUILDING NOTES

BUILDING DIMENSIONS

BAS=[YR=2007] W18 FSP=[YR=2007] N10 W18 S10 E18$ W22 S2 FGR=[YR=2007] W20 S28 E20 N28$ S30 E14 FOP=[YR=2007] E12 N2 W12 S2$ N2 E12 S2 E14 N32$ PTR=E15 FUS=[YR=2007] E20 N2 E36 S32 W14 N4 W3 N6 W9 S10 W10 N2 W20 N28$ W15$.

EXTRA FEATURES

LN	OB/XF CODE	DESCRIPTION	BLD	CAP	L	W	UNITS	UT	Adj R	ADJ UNIT PRICE	ORIG COND	YEAR ON	YEAR ACTUAL	Q	% COND	OB/XF MKT VALUE	NOTES
1	0811	CONCRETE B	0	100	0	0	814.00	SF	5.20	5.20	100	2007	2007	3	87	3,683	
2	0861	POOL GUNIT	0	100	30	15	450.00	SF	85.00	85.00	100	2016	2016	3	78	29,835	
3	0855	CONC PAVER	0	100	0	0	585.00	SF	10.00	10.00	100	2016	2016	3	95	5,558	
4	0911	SCRN RM A	0	100	45	26	1,170.00	SF	17.50	17.50	100	2021	2021	3	90	18,428	

LAND DESCRIPTION

TOTAL OB/XF 57,504

LN	USE CODE	CLS	LAND USE DESCRIPTION	CAP	RD	LOC ZONE	FRONT	DEPTH	TOT LND UTS	UNIT TYPE	DT	DPTH FACT	% COND	TOT ADJ	UNIT PRICE	ADJ UNIT PRICE	LAND VALUE	OTHER ADJUSTMENTS AND NOTES	YEAR	DENSITY	DECL	FRZ	YR	CONSRV
1	000100	C	RES	100	0003	PUD	0.00	0.00	1.00	LT		1.00	1.00	1.00	65,000.00	65,000.00	65,000							

REVIEW DATE 10/12/2021 BY NW Total Acres: 0.00 Total Land Value: 65,000 Market: 0 Agricultural: 0 Common: 65,000 PRINTED 07/30/2025 BY SYS