LOT 32
BELLS RIVER ESTATE #1 PB 7/90

KENNEDY MATTHEW M
87198 KIPLING DRIVE
YULEE, FL 32097

2025

37-3N-27-0134-0032-0000

NASSAU COUNTY PROPERTY

BUILDING CHARACTERISTICS

ELEMENT	CD	CONSTRUCTION
Exterior Wall	16	WD FR STUC 50
Exterior Wall	17	CB STUCCO 50
Roof Structur	03	GABLE/HIP 100
Roof Cover	03	COMP SHNGL 100
Interior Wall	05	DRYWALL 100
Interior Floo	14	CARPET 80
Interior Floo	08	SHT VINYL 20
Air Condition	03	CENTRAL 100
Heating Type	04	AIR DUCTED 100
Bedrooms		4 100
Bathrooms		2.5 100
Frame	02	WOOD FRAME 100
Stories	2.	2. 100
Units		0 100
Occupancy	00	NONE 100
Quality	03	Quality Level 03

DOR CODE	0100	SINGLE FAMILY	
MAP NUM		MKT AREA	04
NEIGHBORHOOD/LOC	4055.00		

AREA TYPE	TOTAL GROSS AREA	PCT OF BASE	YEAR	TOT ADJ AREA	SUBAREA MARKET VALUE
BAS	1,228	100	2005	1,228	108,889
FGR	400	55	2005	220	19,508
FOP	12	30	2005	4	355
FSP	220	40	2005	88	7,803
FUS	1,624	100	2005	1,624	144,004
TOTALS	3,484			3,164	280,558

MARKET ADJUSTMENTS

TYPE	MDL	EFF. AREA	TOT ADJ PTS	EFF. BASE RATE	REPL. COST NEW	AYB	EYB	ECON	FNCT		NORM	% COND
0100	01	3,164	97.9800	97.98	310,009	2005	2005	0	0	0	9.50	90.50

1 SINGLE FAM – 100% - 2013 Heated Area: 2852 HX Base Yr 2013

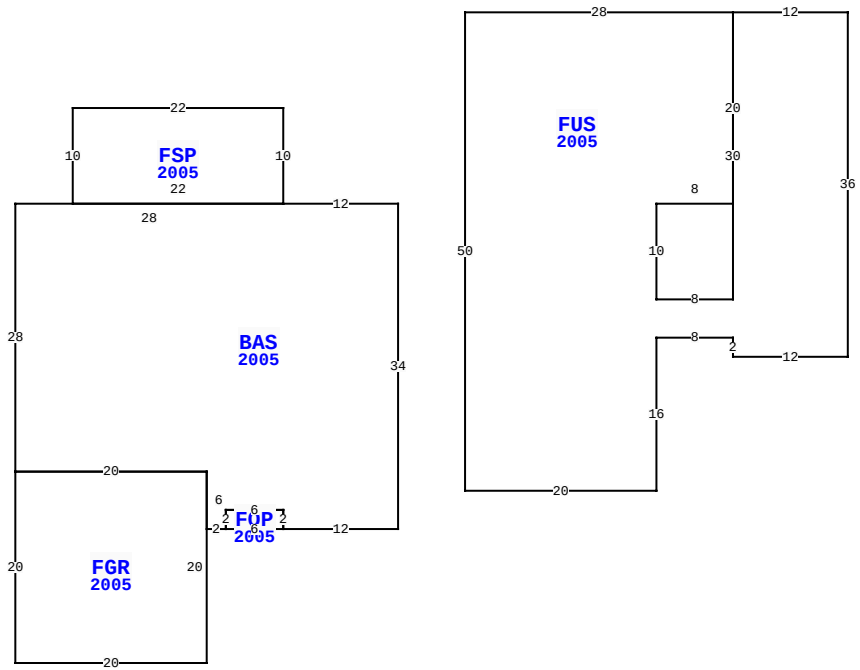

87198 KIPLING DR, YULEE

BLD DATE	04/04/2023	NW	LGL DATE		
XF DATE			LAND DATE	04/22/2025	MLU
INC DATE			AG DATE		

NASSAU COUNTY PROPERTY — VALUATION SUMMARY

VALUATION BY		STANDARD
Tax Group: 4	Tax Dist:	
BUILDING MARKET VALUE		280,558
TOTAL MARKET OB/XF VALUE		2,996
TOTAL LAND VALUE - MARKET		65,000
TOTAL MARKET VALUE		348,554
SOH/AGL Deduction		98,165
ASSESSED VALUE		250,389
TOTAL EXEMPTION VALUE	HX HB	50,722
BASE TAXABLE VALUE		199,667
TOTAL JUST VALUE		348,554
NCON VALUE		0
INCOME VALUE		
PREVIOUS YEAR MKT VALUE		316,068

PERMIT NUM	DESCRIPTION	AMT	ISSUED
B0515301	NEW CONSTR	0	01/01/2005

SALES DATA

OFF RECORD Number	DATE	TYPE INST	Q / U	V / I	RSN CD	SALE PRICE
2551/0638	12/08/2021	QC	U	I	11	100
GRANTOR: KENNEDY LINDSEY N/K/A						
GRANTEE: KENNEDY MATTHEW MAR						
1609/0109	3/06/2009	WD	U	I	12	169,900
GRANTOR: PROEHL COLE JESSE						
GRANTEE: KENNEDY MATTHEW M &						

BUILDING NOTES

BUILDING DIMENSIONS

BAS=[YR=2005] W12 FSP=[YR=2005] N10 W22 S10 E22$ W28 S28 FGR=[YR=2005] S20 E20 N20 W20$ E20 S6 E2 FOP=[YR=2005] E6 N2 W6 S2$ N2 E6 S2 E12 N34$ PTR= E35 FUS=[YR=2005] N20 W28 S50 E20 N16 E8 S2 E12 N36 W12 S30 W8 N10 E8 $ W35 $.

EXTRA FEATURES

LN	OB/XF CODE	DESCRIPTION	BLD	CAP	L	W	UNITS	UT	Adj R	ADJ UNIT PRICE	ORIG COND	YEAR ON	YEAR ACTUAL	Q	% COND	OB/XF MKT VALUE	NOTES
1	0811	CONCRETE B	0	100	0	0	686.00	SF	5.20	5.20	100	2005	2005	3	84	2,996	

LAND DESCRIPTION

TOTAL OB/XF 2,996

LN	USE CODE	CLS	LAND USE DESCRIPTION	CAP	RD	LOC ZONE	FRONT	DEPTH	TOT LND UTS	UNIT TYPE	DT	DPTH FACT	% COND	TOT ADJ	UNIT PRICE	ADJ UNIT PRICE	LAND VALUE	OTHER ADJUSTMENTS AND NOTES	YEAR	DENSITY	DECL	FRZ	YR	CONSRV
1	000100	C	RES	100	0003	PUD	0.00	0.00	1.00	LT		1.00	1.00	1.00	65,000.00	65,000.00	65,000							

REVIEW DATE 05/12/2019 BY KBA Total Acres: 0.00 Total Land Value: 65,000 Market: 0 Agricultural: 0 Common: 65,000 PRINTED 07/30/2025 BY SYS