LOT 24
IN OR 2141/666
CONSERV ESMT PT OR 1299/53

AH4R PROPERTIES LLC
ATTN: PROPERTY TAX DEPARTMENT, 23975 PARK SORRENTO, SUITE 3
CALABASAS, CA 91302

2025

37-3N-27-0134-0024-0000

NASSAU COUNTY PROPERTY

BUILDING CHARACTERISTICS

ELEMENT	CD	CONSTRUCTION
Exterior Wall	16	WD FR STUC 50
Exterior Wall	17	CB STUCCO 50
Roof Structur	03	GABLE/HIP 100
Roof Cover	03	COMP SHNGL 100
Interior Wall	05	DRYWALL 100
Interior Floo	14	CARPET 80
Interior Floo	11	CLAY TILE 20
Air Condition	03	CENTRAL 100
Heating Type	04	AIR DUCTED 100
Bedrooms		4 100
Bathrooms		2.5 100
Frame	02	WOOD FRAME 100
Stories	2.	2. 100
Units		0 100
Occupancy	00	NONE 100
Quality	03	Quality Level 03
DOR CODE	0100	SINGLE FAMILY
MAP NUM		MKT AREA 04
NEIGHBORHOOD/LOC	4055.00	

AREA TYPE	TOTAL GROSS AREA	PCT OF BASE	YEAR	TOT ADJ AREA	SUBAREA MARKET VALUE
BAS	1,237	100	2006	1,237	112,984
FGR	623	55	2006	343	31,329
FOP	20	30	2006	6	548
FSP	280	40	2006	112	10,229
FUS	1,636	100	2006	1,636	149,427
PTO	24	5	2006	1	91
TOTALS	3,820			3,335	304,608

MARKET ADJUSTMENTS

TYPE	MDL	EFF. AREA	TOT ADJ PTS	EFF. BASE RATE	REPL. COST NEW	AYB	EYB	ECON	FNCT		NORM	% COND
0100	01	3,335	100.3720	100.37	334,734	2006	2006	0	0	0	9.00	91.00

1 SINGLE FAM – 0% - 0 Heated Area: 2873 HX Base Yr

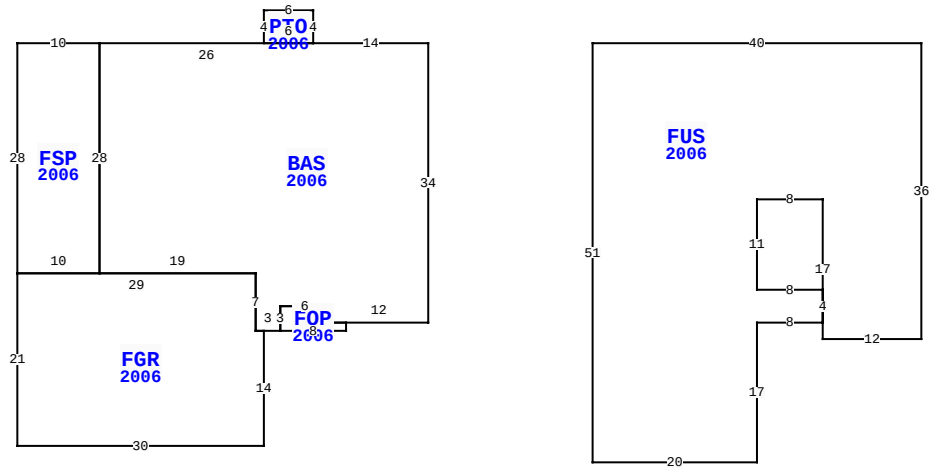

87067 KIPLING DR, YULEE

BLD DATE	04/04/2023 NW	LGL DATE	
XF DATE	09/24/2007 JM	LAND DATE	04/22/2025 MLU
INC DATE		AG DATE	

VALUATION SUMMARY

VALUATION BY	STANDARD
Tax Group: 4	Tax Dist:
BUILDING MARKET VALUE	304,608
TOTAL MARKET OB/XF VALUE	22,457
TOTAL LAND VALUE - MARKET	68,250
TOTAL MARKET VALUE	395,315
SOH/AGL Deduction	51,529
ASSESSED VALUE	343,786
TOTAL EXEMPTION VALUE	0
BASE TAXABLE VALUE	343,786
TOTAL JUST VALUE	395,315
NCON VALUE	0
INCOME VALUE	
PREVIOUS YEAR MKT VALUE	362,252

PERMIT NUM	DESCRIPTION	AMT	ISSUED
B20380	SCRN ENCL	7,956	08/01/2007
B20420	REMODEL	876	08/01/2007
B20237	SWIM POOL	27,092	07/01/2007
C0516361	CO ISSUED	0	09/29/2006
B0516361	NEW CONSTR	0	09/29/2006

SALES DATA

OFF RECORD Number	DATE	TYPE INST	Q / U	V / I	RSN CD	SALE PRICE
2141/0666	8/21/2017	CT	U	I	18	176,300
GRANTOR: CLERK OF COURT						
GRANTEE: AH4R PROPERTIES LLC						
1994/0364	7/24/2015	WD	Q	I	01	230,000
GRANTOR: COUNTS TAMMY LEA						
GRANTEE: SALVAS KERRY A						

BUILDING NOTES

BUILDING DIMENSIONS

BAS=[YR=2006] W14 PTO=[YR=2006] N4 W6 S4 E6$ W26 FSP=[YR=2006] W10 S28 FGR=[YR=2006] S21 E30 N14 W1 N7 W29$ E10 N28$ S28 E19 S7 E3 FOP=[YR=2006] E8 N1 W2 N2 W6 S3$ N3 E6 S2 E12 N34$ PTR=E20 FUS=[YR=2006] E40 S36 W12 N17 W8 S11 E8 S4 W8 S17 W20 N51$ W20$.

EXTRA FEATURES

LN	OB/XF CODE	DESCRIPTION	BLD	CAP	L	W	UNITS	UT	Adj R	ADJ UNIT PRICE	ORIG COND	YEAR ON	YEAR ACTUAL	Q	% COND	OB/XF MKT VALUE	NOTES
1	0811	CONCRETE B	0	0	0	0	1,116.00	SF	5.20	5.20	100	2006	2006	3	86	4,991	
2	0861	POOL GUNIT	0	0	0	0	225.00	SF	85.00	85.00	100	2007	2007	3	44	8,415	
3	0911	SCRN RM A	0	0	50	18	900.00	SF	17.50	17.50	100	2007	2007	3	27	4,253	
4	0845	KOOL DECK	0	0	0	0	675.00	SF	7.25	7.25	100	2007	2007	3	87	4,258	
5	0871	POOL HTR R	0	0	0	0	1.00	UT	2,000.00	2,000.00	100	2007	2007	3	27	540	

LAND DESCRIPTION

TOTAL OB/XF 22,457

LN	USE CODE	CLS	LAND USE DESCRIPTION	CAP	RD	LOC ZONE	FRONT	DEPTH	TOT LND UTS	UNIT TYPE	DT	DPTH FACT	% COND	TOT ADJ	UNIT PRICE	ADJ UNIT PRICE	LAND VALUE	OTHER ADJUSTMENTS AND NOTES	YEAR	DENSITY	DECL	FRZ	YR	CONSRV
1	000134	C	RES POND	0			0.00	0.00	1.00	LT		1.00	1.00	1.05	65,000.00	68,250.00	68,250							

REVIEW DATE 05/12/2019 BY KBA Total Acres: 0.00 Total Land Value: 68,250 Market: 0 Agricultural: 0 Common: 68,250 PRINTED 07/30/2025 BY SYS