LOT 12
IN OR 1901/1356
BELLS RIVER ESTATE #1 PB 7/90

MUNN RAYMOND
87005 KIP LN
YULEE, FL 32097

2025

37-3N-27-0134-0012-0000

NASSAU COUNTY PROPERTY

BUILDING CHARACTERISTICS

ELEMENT	CD	CONSTRUCTION
Exterior Wall	16	WD FR STUC 50
Exterior Wall	17	CB STUCCO 50
Roof Structur	03	GABLE/HIP 100
Roof Cover	03	COMP SHNGL 100
Interior Wall	05	DRYWALL 100
Interior Floo	14	CARPET 70
Interior Floo	08	SHT VINYL 30
Air Condition	03	CENTRAL 100
Heating Type	04	AIR DUCTED 100
Bedrooms		4 100
Bathrooms		2.5 100
Frame	03	MASONRY 100
Stories	2.	2. 100
Units		0 100
Occupancy	00	NONE 100
Quality	03	Quality Level 03
DOR CODE	0100	SINGLE FAMILY
MAP NUM		MKT AREA 04
NEIGHBORHOOD/LOC	4055.00	

AREA TYPE	TOTAL GROSS AREA	PCT OF BASE	YEAR	TOT ADJ AREA	SUBAREA MARKET VALUE
BAS	1,237	100	2006	1,237	109,257
FGR	623	55	2006	343	30,296
FOP	18	30	2006	5	441
FSP	280	40	2006	112	9,893
FUS	1,644	100	2006	1,644	145,206
PTO	28	5	2006	1	88
TOTALS	3,830			3,342	295,181

MARKET ADJUSTMENTS

TYPE	MDL	EFF. AREA	TOT ADJ PTS	EFF. BASE RATE	REPL. COST NEW	AYB	EYB	ECON	FNCT		NORM	% COND
0100	01	3,342	97.0600	97.06	324,375	2006	2006	0	0	0	9.00	91.00

1 SINGLE FAM – 100% - 2019 Heated Area: 2881 HX Base Yr

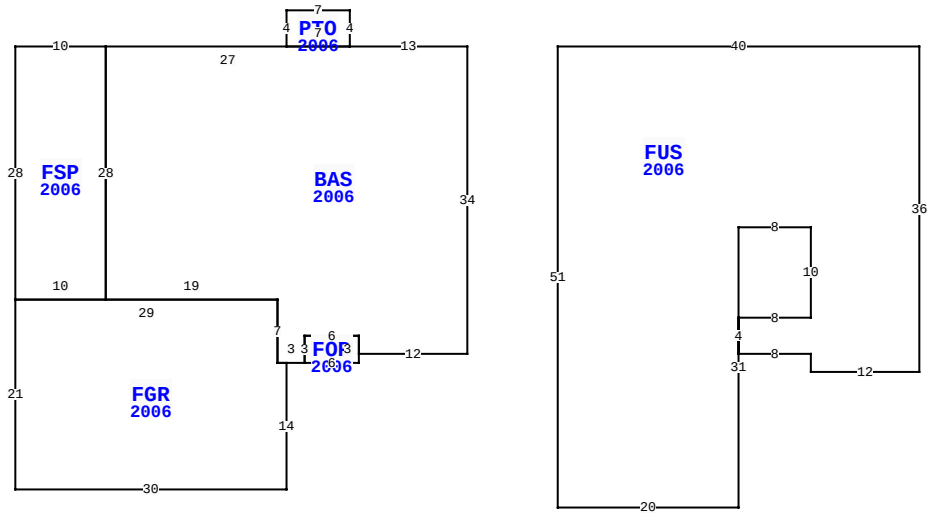

87005 KIP LN, YULEE

BLD DATE		LGL DATE	
XF DATE		LAND DATE	04/22/2025 MLU
INC DATE		AG DATE	

VALUATION SUMMARY

VALUATION BY		STANDARD
Tax Group: 4	Tax Dist:	
BUILDING MARKET VALUE		295,181
TOTAL MARKET OB/XF VALUE		3,495
TOTAL LAND VALUE - MARKET		65,000
TOTAL MARKET VALUE		363,676
SOH/AGL Deduction		26,729
ASSESSED VALUE		336,947
TOTAL EXEMPTION VALUE	13	336,947
BASE TAXABLE VALUE		0
TOTAL JUST VALUE		363,676
NCON VALUE		0
INCOME VALUE		
PREVIOUS YEAR MKT VALUE		330,508

PERMIT NUM	DESCRIPTION	AMT	ISSUED
B15858	NEW CONSTR	0	01/25/2006

SALES DATA

OFF RECORD Number	DATE	TYPE INST	Q / U	V / I	RSN CD	SALE PRICE
1901/1356	1/30/2014	SW	U	I	12	144,100
GRANTOR: FANNIE MAE						
GRANTEE: MUNN RAYMOND						
1880/1627	8/21/2013	WD	U	I	12	180,000
GRANTOR: TERRY ROY III & AMAND						
GRANTEE: FEDERAL NATIONAL MO						

BUILDING NOTES

BUILDING DIMENSIONS

FUS=[YR=2006;ORIG=30,51] N31 E8 S10 W8 S4 E8 S2 E12 N36 W40 S51 E20 $
BAS=[YR=2006;ORIG=0,0] W13 W27 S28 E19 S7 E3 N3 E6 S2 E12 N34 $
FGR=[YR=2006;ORIG=-50,28] S21 E30 N14 W1 N7 W29 $
FSP=[YR=2006;ORIG=-40,0] W10 S28 E10 N28 $
PTO=[YR=2006;ORIG=-13,0] N4 W7 S4 E7 $
FOP=[YR=2006;ORIG=-18,35] E6 N3 W6 S3 $
.

EXTRA FEATURES

LN	OB/XF CODE	DESCRIPTION	BLD	CAP	L	W	UNITS	UT	Adj R	ADJ UNIT PRICE	ORIG COND	YEAR ON	YEAR ACTUAL	Q	% COND	OB/XF MKT VALUE	NOTES
1	0812	CONCRETE C	0	100	0	0	1,016.00	SF	4.00	4.00	100	2006	2006	3	86	3,495	

LAND DESCRIPTION

TOTAL OB/XF 3,495

LN	USE CODE	CLS	LAND USE DESCRIPTION	CAP	RD	LOC ZONE	FRONT	DEPTH	TOT LND UTS	UNIT TYPE	DT	DPTH FACT	% COND	TOT ADJ	UNIT PRICE	ADJ UNIT PRICE	LAND VALUE	OTHER ADJUSTMENTS AND NOTES	YEAR	DENSITY	DECL	FRZ	YR	CONSRV
1	000100	C	RES	100	0003	PUD	0.00	0.00	1.00	LT		1.00	1.00	1.00	65,000.00	65,000.00	65,000							

REVIEW DATE 04/23/2024 BY KWA Total Acres: 0.00 Total Land Value: 65,000 Market: 0 Agricultural: 0 Common: 65,000 PRINTED 07/30/2025 BY SYS