LOT 7
IN OR 1729/15
BELLS RIVER ESTATE #1 PB 7/90

HOWE EDWIN E & MAXINE B
87187 KIPLING DR
YULEE, FL 32097

2025

37-3N-27-0134-0007-0000

BUILDING CHARACTERISTICS

ELEMENT	CD	CONSTRUCTION
Exterior Wall	16	WD FR STUC 50
Exterior Wall	17	CB STUCCO 50
Roof Structur	03	GABLE/HIP 100
Roof Cover	03	COMP SHNGL 100
Interior Wall	05	DRYWALL 100
Interior Floo	14	CARPET 80
Interior Floo	08	SHT VINYL 20
Air Condition	03	CENTRAL 100
Heating Type	04	AIR DUCTED 100
Bedrooms		4 100
Bathrooms		2.5 100
Frame	02	WOOD FRAME 100
Stories	2.	2. 100
Units		0 100
Occupancy	00	NONE 100
Quality	03	Quality Level 03
DOR CODE	0100	SINGLE FAMILY
MAP NUM		MKT AREA 04
NEIGHBORHOOD/LOC	4055.00	

AREA TYPE	TOTAL GROSS AREA	PCT OF BASE	YEAR	TOT ADJ AREA	SUBAREA MARKET VALUE
BAS	1,120	100	2005	1,120	108,493
FGR	441	55	2005	243	23,539
FOP	21	30	2005	6	581
FSP	180	40	2005	72	6,975
FUS	1,115	100	2005	1,115	108,008
TOTALS	2,877			2,556	247,597

MARKET ADJUSTMENTS

TYPE	MDL	EFF. AREA	TOT ADJ PTS	EFF. BASE RATE	REPL. COST NEW	AYB	EYB	ECON	FNCT		NORM	% COND
0100	01	2,556	104.1600	104.16	266,233	2005	2010	0	0	0	7.00	93.00

1 SINGLE FAM – 100% - 2012 Heated Area: 2235 HX Base Yr 2012

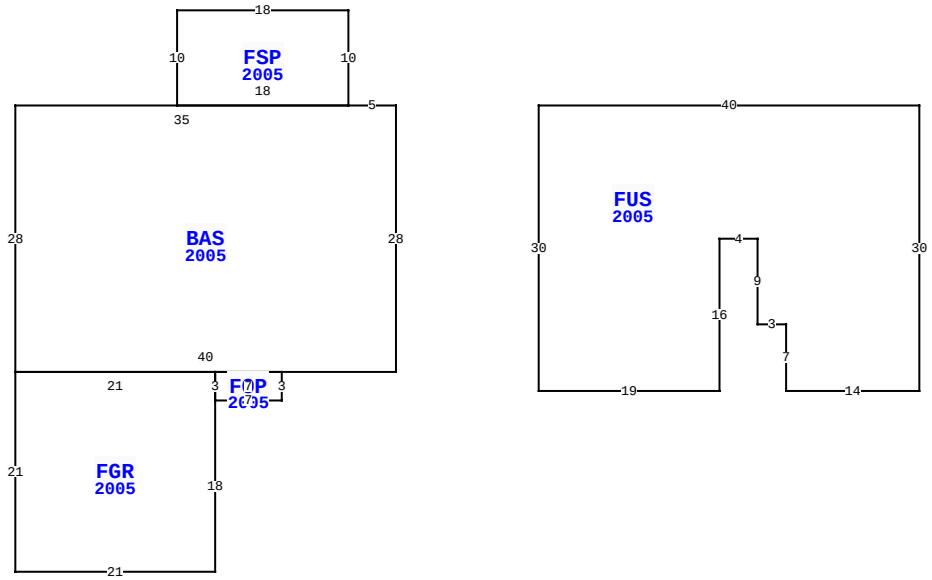

87187 KIPLING DR, YULEE

BLD DATE	04/04/2023 NW	LGL DATE	
XF DATE		LAND DATE	04/22/2025 MLU
INC DATE		AG DATE	

NASSAU COUNTY PROPERTY

PAGE 1 of 1 4

VALUATION SUMMARY

VALUATION BY		STANDARD
Tax Group: 4	Tax Dist:	
BUILDING MARKET VALUE		247,597
TOTAL MARKET OB/XF VALUE		4,529
TOTAL LAND VALUE - MARKET		65,000
TOTAL MARKET VALUE		317,126
SOH/AGL Deduction		144,913
ASSESSED VALUE		172,213
TOTAL EXEMPTION VALUE	HX HB SX	100,722
BASE TAXABLE VALUE		71,491
TOTAL JUST VALUE		317,126
NCON VALUE		0
INCOME VALUE		
PREVIOUS YEAR MKT VALUE		286,135

PERMIT NUM	DESCRIPTION	AMT	ISSUED
20001117	REROOF	13,000	02/12/2020
B15731	NEW CONSTR	0	01/23/2006

SALES DATA

OFF RECORD Number	DATE	TYPE INST	Q U	V I	RSN CD	SALE PRICE
1729/0015	3/07/2011	WD	U	I	11	119,000
GRANTOR: AMTRUST REO I LLC						
GRANTEE: HOWE EDWIN E & MAXI						
1729/0001	3/07/2011	WD	U	I	12	17,214
GRANTOR: AMTRUST-NP SFR VENTUR						
GRANTEE: AMTRUST REO I LLC						

BUILDING NOTES

BUILDING DIMENSIONS

BAS=[YR=2005] W5 FSP=[YR=2005] N10 W18 S10 E18$ W35 S28 FGR=[YR=2005] S21 E21 N18 FOP=[YR=2005] E7 N3 W7 S3$ N3 W21$ E40 N28$ PTR=E15 FUS=[YR=2005] E40 S30 W14 N7 W3 N9 W4 S16 W19 N30$ W15$.

EXTRA FEATURES

LN	OB/XF CODE	DESCRIPTION	BLD	CAP	L	W	UNITS	UT	Adj R	ADJ UNIT PRICE	ORIG COND	YEAR ON	YEAR ACTUAL	Q	% COND	OB/XF MKT VALUE	NOTES
1	0811	CONCRETE B	0	100	0	0	694.00	SF	5.20	5.20	100	2005	2005	3	84	3,031	
2	0471	VINYL FNC	0	100	0	0	60.00	LF	32.00	32.00	100	2011	2011	3	78	1,498	

LAND DESCRIPTION

TOTAL OB/XF 4,529

LN	USE CODE	CLS	LAND USE DESCRIPTION	CAP	RD	LOC ZONE	FRONT	DEPTH	TOT LND UTS	UNIT TYPE	DT	DPTH FACT	% COND	TOT ADJ	UNIT PRICE	ADJ UNIT PRICE	LAND VALUE	OTHER ADJUSTMENTS AND NOTES	YEAR	DENSITY	DECL	FRZ	YR	CONSRV
1	000100	C	RES	100	0003	PUD	0.00	0.00	1.00	LT		1.00	1.00	1.00	65,000.00	65,000.00	65,000							

REVIEW DATE 02/05/2020 BY NW Total Acres: 0.00 Total Land Value: 65,000 Market: 0 Agricultural: 0 Common: 65,000 PRINTED 07/30/2025 BY SYS