LOT 35B IN OR 2194/1074
THE VILLAGE @ MARSH LAKES
PB 5/355

ADIN TANYA S L/E/
92028 SECRET COVE COURT
FERNANDINA BEACH, FL 32034

2025

37-2N-28-227V-035B-0000

BUILDING CHARACTERISTICS

ELEMENT	CD	CONSTRUCTION
Exterior Wall	31	HARDIE BRD 100
Roof Structur	08	IRREGULAR 100
Roof Cover	03	COMP SHNGL 100
Interior Wall	05	DRYWALL 100
Interior Floo	14	CARPET 80
Interior Floo	08	SHT VINYL 20
Air Condition	03	CENTRAL 100
Heating Type	04	AIR DUCTED 100
Bedrooms		2 100
Bathrooms		2 100
Frame	02	WOOD FRAME 100
Stories	2.	2. 100
Units		0 100
Occupancy	00	NONE 100
Quality	04	Quality Level 04
DOR CODE	0100	SINGLE FAMILY
MAP NUM		MKT AREA 04
NEIGHBORHOOD/LOC	4015.0100	

AREA TYPE	TOTAL GROSS AREA	PCT OF BASE	YEAR	TOT ADJ AREA	SUBAREA MARKET VALUE
BAS	1,732	100	1996	1,732	167,550
FGR	480	55	1996	264	25,539
FOP	96	30	1996	29	2,806
FUS	287	100	1996	287	27,764
PTO	80	5	1996	4	387
TOTALS	2,675			2,316	224,046

MARKET ADJUSTMENTS

TYPE	MDL	EFF. AREA	TOT ADJ PTS	EFF. BASE RATE	REPL. COST NEW	AYB	EYB	ECON	FNCT		NORM	% COND
0320	01	2,316	112.1610	112.16	259,763	1996	1996	0	0	0	13.75	86.25

1 TOWNHOUSE - 100% - 1997 Heated Area: 2019 HX Base Yr 1997

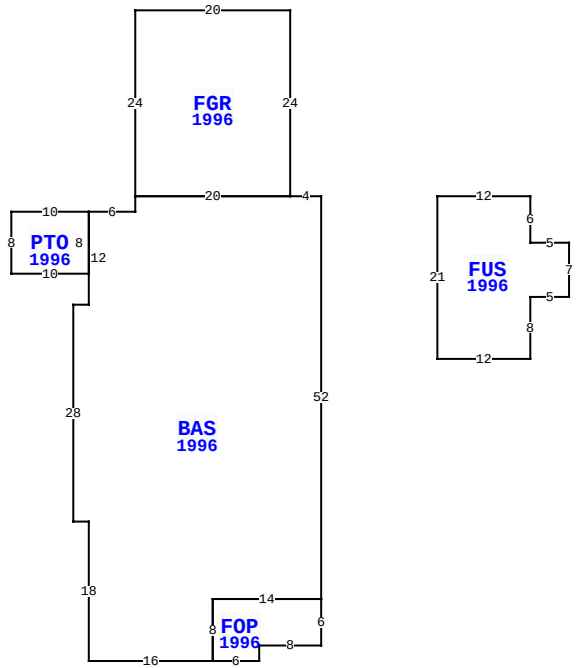

92028 SECRET COVE CT, FERNANDINA BEACH

BLD DATE		LGL DATE	
XF DATE		LAND DATE	04/16/2025 MLU
INC DATE		AG DATE	

NASSAU COUNTY PROPERTY

PAGE 1 of 1 7

VALUATION SUMMARY

VALUATION BY		STANDARD
Tax Group: 7	Tax Dist:	
BUILDING MARKET VALUE		224,046
TOTAL MARKET OB/XF VALUE		2,098
TOTAL LAND VALUE - MARKET		150,000
TOTAL MARKET VALUE		376,144
SOH/AGL Deduction		212,361
ASSESSED VALUE		163,783
TOTAL EXEMPTION VALUE	HX HB	50,722
BASE TAXABLE VALUE		113,061
TOTAL JUST VALUE		376,144
NCON VALUE		0
INCOME VALUE		
PREVIOUS YEAR MKT VALUE		316,230

PERMIT NUM	DESCRIPTION	AMT	ISSUED
963164	NEW CONSTR	68,680	08/01/1996

SALES DATA

OFF RECORD Number	DATE	TYPE INST	Q / U	V / I	RSN CD	SALE PRICE
2194/1074	4/16/2018	LE	U	I	11	100
GRANTOR: ADIN TANYA S L/E						
GRANTEE: ADIN DAWN M						
0780/0976	12/26/1996	WD	Q	I		121,400
GRANTOR: TREVETT HOMES						
GRANTEE: ADIN TANYA S						

BUILDING NOTES

BUILDING DIMENSIONS

BAS=[YR=1996] W4 FGR=[YR=1996] N24 W20 S24 E20 $ W20 S2 W6
PTO=[YR=1996] W10 S8 E10 N8 $ S12 W2 S28 E2 S18 E16
FOP=[YR=1996] E6 N2 E8 N6 W14 S8 $ N8 E14 N52 $ PTR= E15
FUS=[YR=1996] E12 S6 E5 S7 W5 S8 W12 N21 $ W15 $.

EXTRA FEATURES

L N	OB/XF CODE	DESCRIPTION	BLD	CAP	L	W	UNITS	UT	Adj R	ADJ UNIT PRICE	ORIG COND	YEAR ON	YEAR ACTUAL	Q	% COND	OB/XF MKT VALUE	NOTES
1	0810	CONCRETE A	0	100	0	0	461.00	SF	6.50	6.50	100	1996	1996	3	70	2,098	

LAND DESCRIPTION

TOTAL OB/XF 2,098

L N	USE CODE	CLS	LAND USE DESCRIPTION	CAP	R D	LOC ZONE	FRONT	DEPTH	TOT LND UTS	UNIT TYPE	D T	DPTH FACT	% COND	TOT ADJ	UNIT PRICE	ADJ UNIT PRICE	LAND VALUE	OTHER ADJUSTMENTS AND NOTES	YEAR	DENSITY	DECL	FRZ	YR	CONSRV
1	000100	C	RES	100		PUD	0.00	0.00	1.00	LT		1.00	1.00	1.00	150,000.00	150,000.00	150,000							

REVIEW DATE 05/12/2019 BY KBA Total Acres: 0.00 Total Land Value: 150,000 Market: 0 Agricultural: 0 Common: 150,000 PRINTED 07/30/2025 BY SYS