LOT 35A
IN OR 1025/1422
THE VILLAGE @ MARSH LAKES

RILEY BARBARA J
92024 SECRET COVE COURT
FERNANDINA BEACH, FL 32034

2025

37-2N-28-227V-035A-0000

BUILDING CHARACTERISTICS

ELEMENT	CD	CONSTRUCTION
Exterior Wall	31	HARDIE BRD 100
Roof Structur	08	IRREGULAR 100
Roof Cover	03	COMP SHNGL 100
Interior Wall	05	DRYWALL 100
Interior Floo	14	CARPET 80
Interior Floo	08	SHT VINYL 20
Air Condition	03	CENTRAL 100
Heating Type	04	AIR DUCTED 100
Bedrooms		3 100
Bathrooms		2 100
Frame	02	WOOD FRAME 100
Stories	2.	2. 100
Units		0 100
Occupancy	00	NONE 100
Quality	04	Quality Level 04
DOR CODE	0100	SINGLE FAMILY
MAP NUM		MKT AREA 04
NEIGHBORHOOD/LOC	4015.0100	

AREA TYPE	TOTAL GROSS AREA	PCT OF BASE	YEAR	TOT ADJ AREA	SUBAREA MARKET VALUE
BAS	1,646	100	1996	1,646	160,693
FGR	440	55	1996	242	23,626
FOP	70	30	1996	21	2,050
FUS	287	100	1996	287	28,019
PTO	100	5	1996	5	488
TOTALS	2,543			2,201	214,875

MARKET ADJUSTMENTS

TYPE	MDL	EFF. AREA	TOT ADJ PTS	EFF. BASE RATE	REPL. COST NEW	AYB	EYB	ECON	FNCT		NORM	% COND
0320	01	2,201	113.1900	113.19	249,131	1996	1996	0	0	0	13.75	86.25

1 TOWNHOUSE - 100% - 2002 Heated Area: 1933 HX Base Yr 2002

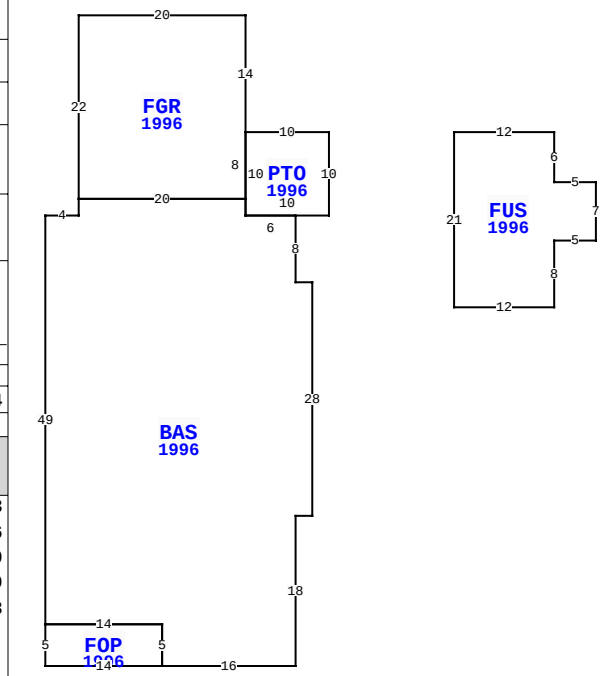

92024 SECRET COVE CT, FERNANDINA BEACH

BLD DATE		LGL DATE	
XF DATE		LAND DATE	04/16/2025 MLU
INC DATE		AG DATE	

NASSAU COUNTY PROPERTY

PAGE 1 of 1 7

VALUATION SUMMARY

VALUATION BY		STANDARD
Tax Group: 7	Tax Dist:	
BUILDING MARKET VALUE		214,875
TOTAL MARKET OB/XF VALUE		1,934
TOTAL LAND VALUE - MARKET		150,000
TOTAL MARKET VALUE		366,809
SOH/AGL Deduction		208,857
ASSESSED VALUE		157,952
TOTAL EXEMPTION VALUE	HX HB WX	55,722
BASE TAXABLE VALUE		102,230
TOTAL JUST VALUE		366,809
NCON VALUE		0
INCOME VALUE		
PREVIOUS YEAR MKT VALUE		307,304

PERMIT NUM	DESCRIPTION	AMT	ISSUED
963165	NEW CONSTR	69,202	08/01/1996

SALES DATA

OFF RECORD Number	DATE	TYPE INST	Q / U	V / I	RSN CD	SALE PRICE
1025/1422	12/19/2001	WD	Q	I		150,000
GRANTOR: GULLBRANTS BRIAN R &						
GRANTEE: RILEY BERNARD F JR						
0851/1575	10/09/1998	WD	Q	I		133,000
GRANTOR: TATE GARY C & BARBARA						
GRANTEE: GULLBRANTS BRIAN &						

BUILDING NOTES

EXTRA FEATURES

L N	OB/XF CODE	DESCRIPTION	BLD	CAP	L	W	UNITS	UT	Adj R	ADJ UNIT PRICE	ORIG COND	YEAR ON	YEAR ACTUAL	Q	% COND	OB/XF MKT VALUE	NOTES
1	0810	CONCRETE A	0	100	0	0	425.00	SF	6.50	6.50	100	1996	1996	3	70	1,934	

BUILDING DIMENSIONS

PTO=[YR=1996] W10 FGR=[YR=1996] N14 W20 S22 BAS=[YR=1996] S2 W4 S49 FOP=[YR=1996] S5 E14 N5 W14 $ E14 S5 E16 N18 E2 N28 W2 N8 W6 N2 W20 $ E20 N8 $ S10 E10 N10 $ PTR= E15 FUS=[YR=1996] E12 S6 E5 S7 W5 S8 W12 N21 $ W15 $.

LAND DESCRIPTION

TOTAL OB/XF 1,934

L N	USE CODE	CLS	LAND USE DESCRIPTION	CAP	R D	LOC ZONE	FRONT	DEPTH	TOT LND UTS	UNIT TYPE	D T	DPTH FACT	% COND	TOT ADJ	UNIT PRICE	ADJ UNIT PRICE	LAND VALUE	OTHER ADJUSTMENTS AND NOTES	YEAR	DENSITY	DECL	FRZ	YR	CONSRV
1	000100	C	RES	100		PUD	0.00	0.00	1.00	LT		1.00	1.00	1.00	150,000.00	150,000.00	150,000							

REVIEW DATE 05/12/2019 BY KBA Total Acres: 0.00 Total Land Value: 150,000 Market: 0 Agricultural: 0 Common: 150,000 PRINTED 07/30/2025 BY SYS