LOT 110
IN OR 1944/926
MARSH LAKES PB 5/159-167

GIBSON THOMAS B & KELLY N
98098 PINTAIL COURT
FERNANDINA BEACH, FL 32034

2025

37-2N-28-1320-0110-0000

NASSAU COUNTY PROPERTY

BUILDING CHARACTERISTICS

ELEMENT	CD	CONSTRUCTION
Exterior Wall	16	WD FR STUC 100
Roof Structur	08	IRREGULAR 100
Roof Cover	03	COMP SHNGL 100
Interior Wall	05	DRYWALL 100
Interior Floo	14	CARPET 80
Interior Floo	15	HARDTILE 20
Air Condition	03	CENTRAL 100
Heating Type	04	AIR DUCTED 100
Bedrooms		5 100
Bathrooms		4 100
Frame	02	WOOD FRAME 100
Stories	2.	2. 100
Units		0 100
Occupancy	00	NONE 100
Quality	03	Quality Level 03
DOR CODE	0100	SINGLE FAMILY
MAP NUM		MKT AREA 04
NEIGHBORHOOD/LOC	4015.00	

AREA TYPE	TOTAL GROSS AREA	PCT OF BASE	YEAR	TOT ADJ AREA	SUBAREA MARKET VALUE
BAS	1,489	100	1998	1,489	204,614
BAS	980	100	2007	980	134,668
FGR	576	55	1998	317	43,561
FOP	206	30	1998	62	8,520
FOP	30	30	2007	9	1,237
FSP	555	40	2007	222	30,507
FUS	1,126	100	1998	1,126	154,731
TOTALS	4,962			4,205	577,837

MARKET ADJUSTMENTS

TYPE	MDL	EFF. AREA	TOT ADJ PTS	EFF. BASE RATE	REPL. COST NEW	AYB	EYB	ECON	FNCT		NORM	% COND
0500	01	4,205	99.9680	157.95	664,180	1998	1998	0	0	0	13.00	87.00

1 SFR CUST – 100% - 2015 Heated Area: 3595 HX Base Yr 2015

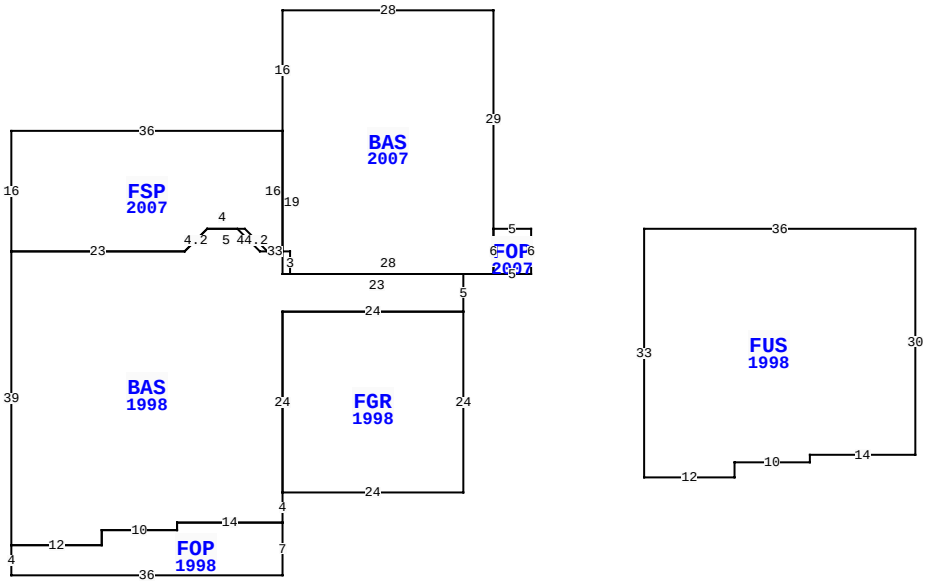

98098 PINTAIL CT, FERNANDINA BEACH

BLD DATE		LGL DATE	
XF DATE		LAND DATE	04/16/2025 MLU
INC DATE		AG DATE	

VALUATION SUMMARY

VALUATION BY		STANDARD
Tax Group: 7	Tax Dist:	
BUILDING MARKET VALUE		577,837
TOTAL MARKET OB/XF VALUE		12,127
TOTAL LAND VALUE - MARKET		250,000
TOTAL MARKET VALUE		839,964
SOH/AGL Deduction		378,715
ASSESSED VALUE		461,249
TOTAL EXEMPTION VALUE	HX HB	50,722
BASE TAXABLE VALUE		410,527
TOTAL JUST VALUE		839,964
NCON VALUE		0
INCOME VALUE		
PREVIOUS YEAR MKT VALUE		805,594

PERMIT NUM	DESCRIPTION	AMT	ISSUED
974262	NEW CONSTR	189,500	10/01/1997

SALES DATA

OFF RECORD Number	DATE	TYPE INST	Q U	V I	RSN CD	SALE PRICE
1944/0926	10/24/2014	WD	Q	I	01	450,000
GRANTOR: DESTEFANO DENISE						
GRANTEE: GIBSON THOMAS B & K						
0714/1251	9/22/1994	WD	Q	V		38,000
GRANTOR: ROBINSON JAMES C JR						
GRANTEE: DESTEFANO THOMAS &						

BUILDING NOTES

BUILDING DIMENSIONS

FOP=[YR=2007] W5 BAS=[YR=2007] N29 W28 S16 FSP=[YR=2007] W36 S16 BAS=[YR=1998] S39 FOP=[YR=1998] S4 E36 N7 W14 S1 W10 S2 W12$ E12 N2 E10 N1 E14 N4 FGR=[YR=1998] E24 N24 W24 S24$ N24 E24 N5 W23 N3 W3 L3 U3 W5 D3 L3 W23$ E23 R3 U3 E4 D3 R3 E3 N16$ S19 E28 N6$ S6 E5 N6$ PTR= E15 FUS=[YR=1998] E36 S30 W14 S1 W10 S2 W12 N33 $ W15 $.

EXTRA FEATURES

LN	OB/XF CODE	DESCRIPTION	BLD	CAP	L	W	UNITS	UT	Adj R	ADJ UNIT PRICE	ORIG COND	YEAR ON	YEAR ACTUAL	Q	% COND	OB/XF MKT VALUE	NOTES
1	0500	FP-PRE FAB	0	100	0	0	1.00	UT	3,500.00	3,500.00	100	1998	1998	3	80	2,800	
2	0812	CONCRETE C	0	100	0	0	2,599.00	SF	4.00	4.00	100	1998	1998	3	73	7,589	
3	0810	CONCRETE A	0	100	0	0	228.00	SF	6.50	6.50	100	1998	1998	3	73	1,082	
4	0877	JACUZZI	0	100	0	0	1.00	UT	1,000.00	1,000.00	100	1998	1998	3	20	200	
6	1125	CB/STC 6"	0	100	17	5	85.00	SF	7.35	7.35	100	1998	1998	3	73	456	

LAND DESCRIPTION

TOTAL OB/XF 12,127

LN	USE CODE	CLS	LAND USE DESCRIPTION	CAP	RD	LOC ZONE	FRONT	DEPTH	TOT LND UTS	UNIT TYPE	DT	DPTH FACT	% COND	TOT ADJ	UNIT PRICE	ADJ UNIT PRICE	LAND VALUE	OTHER ADJUSTMENTS AND NOTES	YEAR	DENSITY	DECL	FRZ	YR	CONSRV
1	000134	C	RES POND	100		PUD	0.00	0.00	1.00	LT		1.00	1.00	1.00	250,000.00	250,000.00	250,000							

REVIEW DATE 12/19/2019 BY KBA Total Acres: 0.00 Total Land Value: 250,000 Market: 0 Agricultural: 0 Common: 250,000 PRINTED 07/30/2025 BY SYS