PT JOHN LOWE MILL GRANTS
SEC 37-2N-27E & 51-3N-27E
IN OR 2407/1161(EX UTIL ESMT'S

CF COURTNEY ISLES LLC
C/O CF REAL EST SERVICES LLC, 710 PEACHTREE ST NE STE #100
ATLANTA, GA 30308

2025

37-2N-27-0000-0001-0260

NASSAU COUNTY PROPERTY

BUILDING CHARACTERISTICS

ELEMENT	CD	CONSTRUCTION
Exterior Wall	31	HARDIE BRD 100
Roof Structur	08	IRREGULAR 100
Roof Cover	03	COMP SHNGL 100
Interior Wall	05	DRYWALL 100
Interior Floo	14	CARPET 70
Interior Floo	11	CLAY TILE 30
Air Condition	03	CENTRAL 100
Heating Type	04	AIR DUCTED 100
Bedrooms		2 100
Bathrooms		2 100
Frame	02	WOOD FRAME 100
Story Height		10 100
RMS		0 100
Units		39 100
Quality	03	Quality Level 03

DOR CODE	0300	MULTI-FAMILY	
MAP NUM		MKT AREA	04
NEIGHBORHOOD/LOC	4002.00		

AREA TYPE	TOTAL GROSS AREA	PCT OF BASE	YEAR	TOT ADJ AREA	SUBAREA MARKET VALUE
BAS	13,492	100	2008	13,492	2,223,455
FOP	5,076	30	2008	1,523	250,988
FSP	1,992	55	2008	1,096	180,618
FST	813	55	2008	447	73,665
FUS	27,364	100	2008	27,364	4,509,532
STR	448	10	2008	45	7,416
UST	24	45	2008	11	1,813
TOTALS	49,209			43,978	7,247,486

MARKET ADJUSTMENTS

TYPE	MDL	EFF. AREA	TOT ADJ PTS	EFF. BASE RATE	REPL. COST NEW	AYB	EYB	ECON	FNCT		NORM	% COND
0302	03	43,978	102.9800	178.16	7,835,120	2008	2008	0	0	0	7.50	92.50

1 APART/LUX – 0% - 0 Heated Area: 40856 HX Base Yr

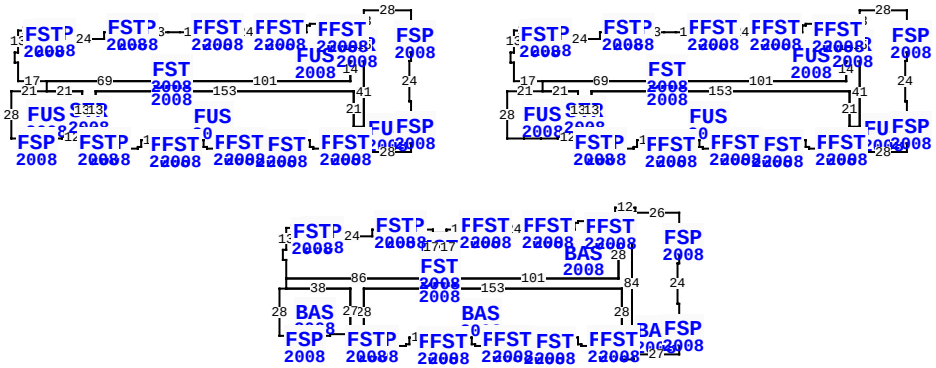

86195 COURTNEY ISLES WAY, YULEE

BLD DATE	04/11/2025	KW	LGL DATE	
XF DATE	04/11/2025	KW	LAND DATE	04/25/2025 DC
INC DATE			AG DATE	

VALUATION SUMMARY

VALUATION BY	DIRECT_CAP
Tax Group: 4	Tax Dist:
BUILDING MARKET VALUE	36,684,304
TOTAL MARKET OB/XF VALUE	0
TOTAL LAND VALUE - MARKET	0
TOTAL MARKET VALUE	39,874,243
SOH/AGL Deduction	0
ASSESSED VALUE	39,874,243
TOTAL EXEMPTION VALUE	0
BASE TAXABLE VALUE	39,874,243
TOTAL JUST VALUE	39,874,243
NCON VALUE	0
INCOME VALUE	39,874,243
PREVIOUS YEAR MKT VALUE	37,260,507

COURTNEY ISLES APARTMENT COMPLEX

PERMIT NUM	DESCRIPTION	AMT	ISSUED
C20274	CO ISSUED	412,909	09/11/2008
C20277	CO ISSUED	1,340,658	09/11/2008
E20417	ELEC OTHER	1,000	01/01/2008
M13422	MECH OTHER	0	11/01/2007
M13440	MECH OTHER	0	11/01/2007
M13441	MECH OTHER	0	11/01/2007

SALES DATA

OFF RECORD Number	DATE	TYPE INST	Q U	V I	RSN CD	SALE PRICE
2407/1161	11/10/2020	SW	Q	I	01	37,320,000
GRANTOR: RAIA FL SPE GROUP IV						
GRANTEE: CF COURTNEY ISLES L						
2056/0003	6/28/2016	SW	U	I	11	100
GRANTOR: DUDLEY JOHNNY L, DANI						
GRANTEE: COURTNEY ISLES LLC						

BUILDING NOTES

BUILDING DIMENSIONS

FUS=[YR=2008;LABEL=2nd FLR;ORIG=-231,0] E14 S5 E3 E10 E24 N4 E12 E3 E10 E13 E7 E14 E10 E3 E24 E10 E3 E11 N4 E2 N1 E9 S1 E2 S5 E10 E3 S14 S14 W101 N4 N6 W10 S6 S4 W69 W17 N11 W2 N6 E2 N13 $

FUS=[YR=2008;LABEL=3RD FLR;ORIG=63,0] E14 S5 E3 E10 E24 N4 E12 E3 E10 E13 E7 E14 E10 E3 E24 E10 E3 E11 N4 E2 N1 E9 S1 E2 S5 E10 E3 S14 S14 W101 N4 N6 W10 S6 S4 W69 W17 N11 W2 N6 E2 N13 $

BAS=[YR=2008;LABEL=bas;ORIG=-72,117] E14 S5 E3 E10 E24 N4 E12 E3 E10 E11 S2 E8 N2 E15 E10 E3 E24 E10 E3 E11 N4 E2 N1 E9 S1 E2 S5 E10 E3 S28 W101 N4 N6 N17 W10 S17 S6 S4 W86 N11 W2 N6 E2 N13 $

EXTRA FEATURES

LN	OB/XF CODE	DESCRIPTION	BLD	CAP	L	W	UNITS	UT	Adj R	ADJ UNIT PRICE	ORIG COND	YEAR ON	YEAR ACTUAL	Q	% COND	OB/XF MKT VALUE	NOTES
1	0803	ASPHALT C	0	0	0	0	153,110.00	SF	2.00	2.00	100	2008	2008	3	60	183,732	
2	0400	CONC CURB	0	0	0	0	4,970.00	LF	15.00	15.00	100	2008	2008	3	91	67,841	
3	0402	CONC BUMPE	0	0	0	0	20.00	UT	25.00	25.00	100	2008	2008	3	91	455	
4	0810	CONCRETE A	0	0	0	0	16,912.00	SF	6.50	6.50	100	2008	2008	3	88	96,737	
5	0812	CONCRETE C	0	0	0	0	13,383.00	SF	4.00	4.00	100	2008	2008	3	88	47,108	
6	0963	FIRE HYDR	0	0	0	0	9.00	UT	1,500.00	1,500.00	100	2008	2008	3	100	13,500	
7	0972	ST LGHT UN	0	0	0	0	27.00	UT	2,530.00	2,530.00	100	2008	2008	3	72	49,183	
8	0975	ST LT/ARM	0	0	0	0	6.00	UT	500.00	500.00	100	2008	2008	3	72	2,160	
9	0422	CL FNC 4'	0	0	0	0	383.00	LF	17.25	17.25	100	2008	2008	3	72	4,757	
10	1126	CB/STC 8"	0	0	36	6	216.00	SF	8.00	8.00	100	2008	2008	3	88	1,521	

TOTAL OB/XF 466,994

LAND DESCRIPTION

LN	USE CODE	CLS	LAND USE DESCRIPTION	CAP	RD	LOC ZONE	FRONT	DEPTH	TOT LND UTS	UNIT TYPE	DT	DPTH FACT	% COND	TOT ADJ	UNIT PRICE	ADJ UNIT PRICE	LAND VALUE	OTHER ADJUSTMENTS AND NOTES	YEAR	DENSITY	DECL	FRZ	YR	CONSRV
1	000300	C	MULTI-FAMILY	0		RG-2	0.00	0.00	240.00	UT		1.00	1.00	1.00	15,000.00	15,000.00	3,656,189							

REVIEW DATE 04/11/2025 BY KW Total Acres: 0.00 Total Land Value: 3,189,939 Market: 0 Agricultural: 0 Common: 0 PRINTED 07/30/2025 BY SYS

PT JOHN LOWE MILL GRANTS
SEC 37-2N-27E & 51-3N-27E
IN OR 2407/1161(EX UTIL ESMT'S

CF COURTNEY ISLES LLC
C/O CF REAL EST SERVICES LLC, 710 PEACHTREE ST NE STE #100
ATLANTA, GA 30308

2025

37-2N-27-0000-0001-0260

BUILDING CHARACTERISTICS

ELEMENT	CD	CONSTRUCTION
Exterior Wall	31	HARDIE BRD 100
Roof Structur	08	IRREGULAR 100
Roof Cover	03	COMP SHNGL 100
Interior Wall	05	DRYWALL 100
Interior Floo	14	CARPET 70
Interior Floo	11	CLAY TILE 30
Air Condition	03	CENTRAL 100
Heating Type	04	AIR DUCTED 100
Bedrooms		2 100
Bathrooms		2 100
Frame	02	WOOD FRAME 100
Story Height		10 100
RMS		0 100
Units		39 100
Quality	03	Quality Level 03
DOR CODE	0300	MULTI-FAMILY
MAP NUM		MKT AREA 04
NEIGHBORHOOD/LOC	4002.00	

AREA TYPE	TOTAL GROSS AREA	PCT OF BASE	YEAR	TOT ADJ AREA	SUBAREA MARKET VALUE
BAS	13,492	100	2008	13,492	2,223,455
FOP	1,446	30	2008	434	71,522
FOP	1,446	30	2008	434	71,522
FOP	2,184	30	2008	655	107,943
FSP	50	55	2008	28	4,614
FSP	50	55	2008	28	4,614
FSP	50	55	2008	28	4,614
FSP	50	55	2008	28	4,614
FSP	50	55	2008	28	4,614
FSP	50	55	2008	28	4,614
TOTALS	49,209			43,981	7,247,981

MARKET ADJUSTMENTS

TYPE	MDL	EFF. AREA	TOT ADJ PTS	EFF. BASE RATE	REPL. COST NEW	AYB	EYB	ECON	FNCT		NORM	% COND
0302	03	43,981	102.9800	178.16	7,835,655	2008	2008	0	0	0	7.50	92.50

2 APART/LUX – 0% - 0 Heated Area: 40856 HX Base Yr

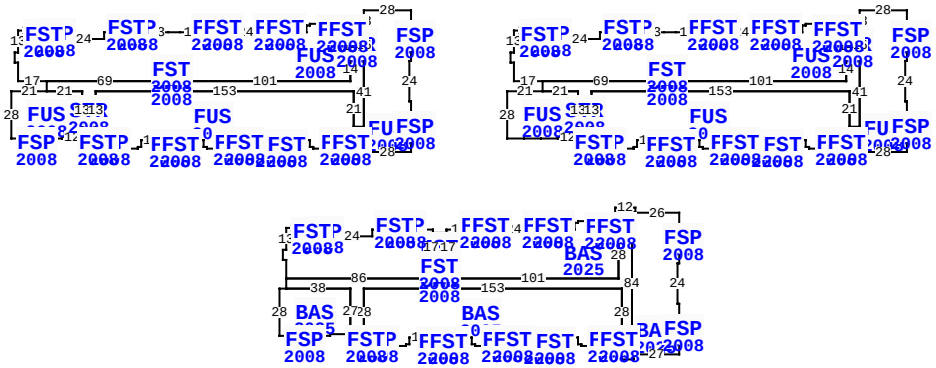

** This building has 67 Sub-Areas

86195 COURTNEY ISLES WAY, YULEE

BLD DATE	04/11/2025	KW	LGL DATE		
XF DATE	04/11/2025	KW	LAND DATE	04/25/2025	DC
INC DATE			AG DATE		

NASSAU COUNTY PROPERTY

PAGE 2 of 20 4

VALUATION SUMMARY

VALUATION BY	DIRECT_CAP
Tax Group: 4	Tax Dist:
BUILDING MARKET VALUE	36,684,304
TOTAL MARKET OB/XF VALUE	0
TOTAL LAND VALUE - MARKET	0
TOTAL MARKET VALUE	39,874,243
SOH/AGL Deduction	0
ASSESSED VALUE	39,874,243
TOTAL EXEMPTION VALUE	0
BASE TAXABLE VALUE	39,874,243
TOTAL JUST VALUE	39,874,243
NCON VALUE	0
INCOME VALUE	39,874,243
PREVIOUS YEAR MKT VALUE	37,260,507

PERMIT NUM	DESCRIPTION	AMT	ISSUED
M13442	MECH OTHER	0	11/01/2007
M13443	MECH OTHER	0	11/01/2007
M13444	MECH OTHER	0	11/01/2007
M13445	MECH OTHER	0	11/01/2007
M13446	MECH OTHER	0	11/01/2007
M13447	MECH OTHER	0	11/01/2007

SALES DATA

OFF RECORD Number	DATE	TYPE INST	Q / U	V / I	RSN CD	SALE PRICE
2407/1161	11/10/2020	SW	Q	I	01	37,320,000
GRANTOR: RAIA FL SPE GROUP IV						
GRANTEE: CF COURTNEY ISLES L						
2056/0003	6/28/2016	SW	U	I	11	100
GRANTOR: DUDLEY JOHNNY L, DANI						
GRANTEE: COURTNEY ISLES LLC						

BUILDING NOTES

EXTRA FEATURES

LN	OB/XF CODE	DESCRIPTION	BLD	CAP	L	W	UNITS	UT	Adj R	ADJ UNIT PRICE	ORIG COND	YEAR ON	YEAR ACTUAL	Q	% COND	OB/XF MKT VALUE	NOTES
11	1126	CB/STC 8"	0	0	83	9	747.00	SF	8.00	8.00	100	2008	2008	3	88	5,259	
12	0463	FENCE GATE	0	0	0	0	4.00	UT	900.00	900.00	100	2008	2008	3	72	2,592	
13	4950	BOLLARD	0	0	0	0	2.00	UT	100.00	100.00	100	2008	2008	3	100	200	
14	0861	POOL GUNIT	0	0	0	0	1,513.00	SF	85.00	85.00	100	2008	2008	3	48	61,730	
15	0872	POOL HTR C	0	0	0	0	1.00	UT	6,000.00	6,000.00	100	2008	2008	3	31	1,860	
16	0881	FOUNTAIN	0	0	9	9	1.00	UT	0.00	0.00	100	2008	2008	3	100	15,000	
19	0855	CONC PAVER	0	0	0	0	8,797.00	SF	10.00	10.00	100	2008	2008	3	88	77,414	
20	0462	ST/AL FNC	0	0	0	0	2,500.00	SF	10.00	10.00	100	2008	2008	3	48	12,000	
21	1075	TRELLIS G	0	0	12	12	144.00	SF	35.00	35.00	100	2008	2008	3	48	2,419	
22	0600	SUMMER KIT	0	0	0	0	2.00	UT	5,000.00	5,000.00	100	2008	2008	3	31	3,100	

TOTAL OB/XF 181,574

BUILDING DIMENSIONS

FUS=[YR=2008;LABEL=2nd FLR;ORIG=-231,0] E14 S5 E3 E10 E24 N4 E12 E3 E10 E13 E7 E14 E10 E3 E24 E10 E3 E11 N4 E2 N1 E9 S1 E2 S5 E10 E3 S14 S14 W101 N4 N6 W10 S6 S4 W69 W17 N11 W2 N6 E2 N13 $

FUS=[YR=2008;LABEL=3RD FLR;ORIG=63,0] E14 S5 E3 E10 E24 N4 E12 E3 E10 E13 E7 E14 E10 E3 E24 E10 E3 E11 N4 E2 N1 E9 S1 E2 S5 E10 E3 S14 S14 W101 N4 N6 W10 S6 S4 W69 W17 N11 W2 N6 E2 N13 $

BAS=[YR=2025;LABEL=bas;ORIG=-72,117] E14 S5 E3 E10 E24 N4 E12 E3 E10 E11 S2 E8 N2 E15 E10 E3 E24 E10 E3 E11 N4 E2 N1 E9 S1 E2 S5 E10 E3 S28 W101 N4 N6 N17 W10 S17 S6 S4 W86 N11 W2 N6 E2 N13 $

LAND DESCRIPTION

LN	USE CODE	CLS	LAND USE DESCRIPTION	CAP	RD	LOC ZONE	FRONT	DEPTH	TOT LND UTS	UNIT TYPE	DT	DPTH FACT	% COND	TOT ADJ	UNIT PRICE	ADJ UNIT PRICE	LAND VALUE	OTHER ADJUSTMENTS AND NOTES	YEAR	DENSITY	DECL	FRZ	YR	CONSRV

REVIEW DATE 04/11/2025 BY KW Total Acres: 0.00 Total Land Value: 3,189,939 Market: 0 Agricultural: 0 Common: 0 PRINTED 07/30/2025 BY SYS

PT JOHN LOWE MILL GRANTS
SEC 37-2N-27E & 51-3N-27E
IN OR 2407/1161(EX UTIL ESMT'S

CF COURTNEY ISLES LLC
C/O CF REAL EST SERVICES LLC, 710 PEACHTREE ST NE STE #100
ATLANTA, GA 30308

2025

37-2N-27-0000-0001-0260

NASSAU COUNTY PROPERTY

BUILDING CHARACTERISTICS

ELEMENT	CD	CONSTRUCTION
Exterior Wall	31	HARDIE BRD 100
Roof Structur	08	IRREGULAR 100
Roof Cover	03	COMP SHNGL 100
Interior Wall	05	DRYWALL 100
Interior Floo	14	CARPET 70
Interior Floo	11	CLAY TILE 30
Air Condition	03	CENTRAL 100
Heating Type	04	AIR DUCTED 100
Bedrooms		2 100
Bathrooms		2 100
Frame	02	WOOD FRAME 100
Story Height		10 100
RMS		0 100
Units		20 100
Quality	03	Quality Level 03

DOR CODE 0300 MULTI-FAMILY

MAP NUM | MKT AREA 04

NEIGHBORHOOD/LOC 4002.00

AREA TYPE	TOTAL GROSS AREA	PCT OF BASE	YEAR	TOT ADJ AREA	SUBAREA MARKET VALUE
BAS	7,798	100	2008	7,798	1,298,583
FOP	1,032	30	2008	310	51,623
FSP	1,360	55	2008	748	124,562
FST	192	55	2008	106	17,652
FUS	10,902	100	2008	10,902	1,815,485
STR	384	10	2008	38	6,328
UST	28	45	2008	13	2,165
TOTALS	21,696			19,915	3,316,400

MARKET ADJUSTMENTS

TYPE	MDL	EFF. AREA	TOT ADJ PTS	EFF. BASE RATE	REPL. COST NEW	AYB	EYB	ECON	FNCT		NORM	% COND
0302	03	19,915	104.0640	180.03	3,585,297	2008	2008	0	0	0	7.50	92.50

3 APART/LUX – 0% - 0 Heated Area: 18700 HX Base Yr

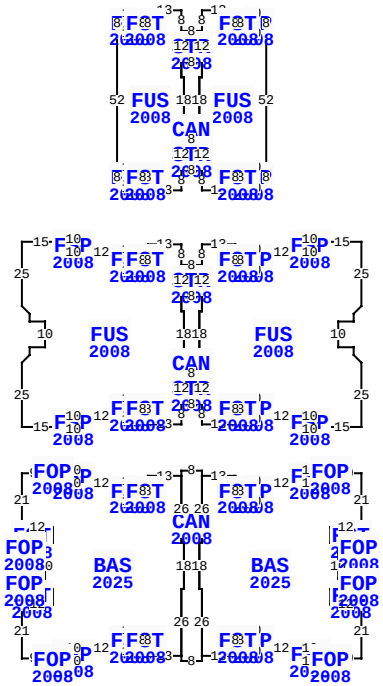

86195 COURTNEY ISLES WAY, YULEE

BLD DATE	04/11/2025	KW	LGL DATE	
XF DATE	04/11/2025	KW	LAND DATE	04/25/2025 DC
INC DATE			AG DATE	

VALUATION SUMMARY

VALUATION BY	DIRECT_CAP
Tax Group: 4	Tax Dist:
BUILDING MARKET VALUE	36,684,304
TOTAL MARKET OB/XF VALUE	0
TOTAL LAND VALUE - MARKET	0
TOTAL MARKET VALUE	39,874,243
SOH/AGL Deduction	0
ASSESSED VALUE	39,874,243
TOTAL EXEMPTION VALUE	0
BASE TAXABLE VALUE	39,874,243
TOTAL JUST VALUE	39,874,243
NCON VALUE	0
INCOME VALUE	39,874,243
PREVIOUS YEAR MKT VALUE	37,260,507

PERMIT NUM	DESCRIPTION	AMT	ISSUED
M13448	MECH OTHER	0	11/01/2007
M13449	MECH OTHER	0	11/01/2007
R10828	REPAIR/RRF	5,000	11/01/2007
R10829	REPAIR/RRF	5,000	11/01/2007
R10830	REPAIR/RRF	2,000	11/01/2007
R10831	REPAIR/RRF	1,000	11/01/2007

SALES DATA

OFF RECORD Number	DATE	TYPE INST	Q U	V I	RSN CD	SALE PRICE
2407/1161	11/10/2020	SW	Q	I	01	37,320,000
GRANTOR: RAIA FL SPE GROUP IV						
GRANTEE: CF COURTNEY ISLES L						
2056/0003	6/28/2016	SW	U	I	11	100
GRANTOR: DUDLEY JOHNNY L, DANI						
GRANTEE: COURTNEY ISLES LLC						

BUILDING NOTES

EXTRA FEATURES

LN	OB/XF CODE	DESCRIPTION	BLD	CAP	L	W	UNITS	UT	Adj R	ADJ UNIT PRICE	ORIG COND	YEAR ON	YEAR ACTUAL	Q	% COND	OB/XF MKT VALUE	NOTES
23	0478	VF 6 SLAT	0	0	30	0	30.00	LF	15.00	15.00	100	2008	2008	3	72	324	
24	0500	FP-PRE FAB	0	0	0	0	1.00	UT	3,500.00	3,500.00	100	2008	2008	3	91	3,185	
25	0351	CARPORT MT	0	0	16	24	384.00	SF	10.00	10.00	100	2008	2008	3	31	1,190	
26	0966	FIRE SPRNK	1	0	0	0	40,856.00	SF	3.00	3.00	100	2008	2008	3	88	107,860	
27	0966	FIRE SPRNK	2	0	0	0	40,856.00	SF	3.00	3.00	100	2008	2008	3	88	107,860	
28	0966	FIRE SPRNK	3	0	0	0	18,700.00	SF	3.00	3.00	100	2008	2008	3	88	49,368	
29	0966	FIRE SPRNK	4	0	0	0	40,856.00	SF	3.00	3.00	100	2008	2008	3	88	107,860	
30	0966	FIRE SPRNK	5	0	0	0	24,284.00	SF	3.00	3.00	100	2008	2008	3	88	64,110	
31	0966	FIRE SPRNK	6	0	0	0	18,700.00	SF	3.00	3.00	100	2008	2008	3	88	49,368	
32	0966	FIRE SPRNK	7	0	0	0	18,700.00	SF	3.00	3.00	100	2008	2008	3	88	49,368	

BUILDING DIMENSIONS

FUS=[YR=2008;LABEL=2ND FLR;ORIG=0,0] W15 S4 W10 W12 S7 W10 W2 N8 N2 W13 S8 S12 S6 W1 S18 E1 S6 S12 S8 E13 N2 N8 E2 E10 S7 E12 E10 S4 E15 N25 U3L3 N3 W6 N10 E6 N3 U3R3 N25 $
FUS=[YR=2008;LABEL=2nd FLR;ORIG=-70,9] N8 W13 S2 S8 W2 W10 N7 W12 W10 N4 W15 S25 D3R3 S3 E6 S10 W6 S3 D3L3 S25 E15 N4 E10 E12 N7 E10 E2 S8 S2 E13 N8 N12 N6 E1 N18 W1 N6 N12 $
BAS=[YR=2025;LABEL=;ORIG=0,90] W9 W6 S4 W10 W12 S7 W10 W2 N8 N2 W13 S26 W1 S18 E1 S26 E13 N2 N8 E2 E10 S7 E12 E10 S4 E6 E9 N21 W12 N6 E6 N4 W3 N10 E3 N4 W6 N6 E12 N21 $
BAS=[YR=2025;LABEL=;ORIG=-70,91] W13 S2 S8 W2 W10 N7 W12 W10 N4 W6 W9 S21 E12 S6 W6 S4 E3 S10 W3 S4 E6 S6 W12 S21 E9 E6 N4 E10 E12 N7 E10 E2 S8 S2 E13 N26 E1 N18 W1 N26 $

LAND DESCRIPTION

TOTAL OB/XF 540,493

LN	USE CODE	CLS	LAND USE DESCRIPTION	CAP	RD	LOC ZONE	FRONT	DEPTH	TOT LND UTS	UNIT TYPE	DT	DPTH FACT	% COND	TOT ADJ	UNIT PRICE	ADJ UNIT PRICE	LAND VALUE	OTHER ADJUSTMENTS AND NOTES	YEAR	DENSITY	DECL	FRZ	YR	CONSRV

REVIEW DATE 04/11/2025 BY KW Total Acres: 0.00 Total Land Value: 3,189,939 Market: 0 Agricultural: 0 Common: 0 PRINTED 07/30/2025 BY SYS

PT JOHN LOWE MILL GRANTS
SEC 37-2N-27E & 51-3N-27E
IN OR 2407/1161(EX UTIL ESMT'S

CF COURTNEY ISLES LLC
C/O CF REAL EST SERVICES LLC, 710 PEACHTREE ST NE STE #100
ATLANTA, GA 30308

2025

37-2N-27-0000-0001-0260

NASSAU COUNTY PROPERTY

BUILDING CHARACTERISTICS

ELEMENT	CD	CONSTRUCTION
Exterior Wall	31	HARDIE BRD 100
Roof Structur	08	IRREGULAR 100
Roof Cover	03	COMP SHNGL 100
Interior Wall	05	DRYWALL 100
Interior Floo	14	CARPET 70
Interior Floo	11	CLAY TILE 30
Air Condition	03	CENTRAL 100
Heating Type	04	AIR DUCTED 100
Bedrooms		2 100
Bathrooms		2 100
Frame	02	WOOD FRAME 100
Story Height		10 100
RMS		0 100
Units		39 100
Quality	03	Quality Level 03
DOR CODE	0300	MULTI-FAMILY
MAP NUM		MKT AREA 04
NEIGHBORHOOD/LOC	4002.00	

AREA TYPE	TOTAL GROSS AREA	PCT OF BASE	YEAR	TOT ADJ AREA	SUBAREA MARKET VALUE
BAS	13,492	100	2008	13,492	2,223,455
FOP	5,076	30	2008	1,523	250,988
FSP	1,992	55	2008	1,096	180,618
FST	813	55	2008	447	73,665
FUS	27,364	100	2008	27,364	4,509,532
STR	448	10	2008	45	7,416
UST	24	45	2008	11	1,813
TOTALS	49,209			43,978	7,247,486

MARKET ADJUSTMENTS

TYPE	MDL	EFF. AREA	TOT ADJ PTS	EFF. BASE RATE	REPL. COST NEW	AYB	EYB	ECON	FNCT		NORM	% COND
0302	03	43,978	102.9800	178.16	7,835,120	2008	2008	0	0	0	7.50	92.50

4 APART/LUX – 0% - 0 Heated Area: 40856 HX Base Yr

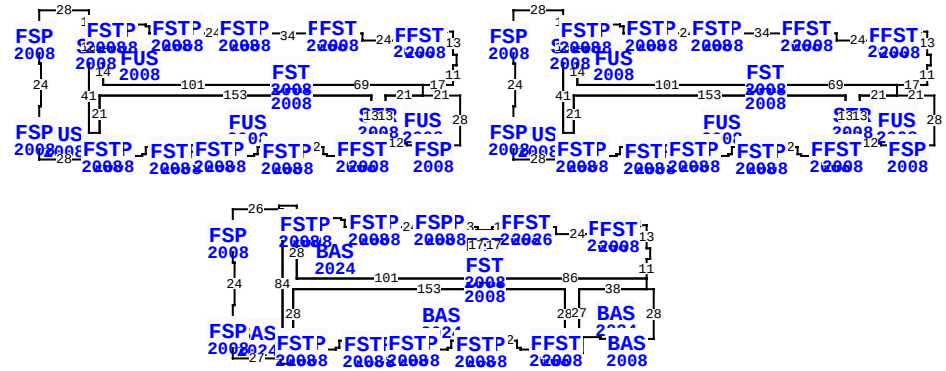

86195 COURTNEY ISLES WAY, YULEE

BLD DATE	04/11/2025	KW	LGL DATE		
XF DATE	04/11/2025	KW	LAND DATE	04/25/2025	DC
INC DATE			AG DATE		

EXTRA FEATURES

LN	OB/XF CODE	DESCRIPTION	BLD	CAP	L	W	UNITS	UT	Adj R	ADJ UNIT PRICE	ORIG COND	YEAR ON	YEAR ACTUAL	Q	% COND	OB/XF MKT VALUE	NOTES
33	0966	FIRE SPRNK	8	0	0	0	18,700.00	SF	3.00	3.00	100	2008	2008	3	88	49,368	
34	0966	FIRE SPRNK	9	0	0	0	18,700.00	SF	3.00	3.00	100	2008	2008	3	88	49,368	
35	0966	FIRE SPRNK	10	0	0	0	4,617.00	SF	3.00	3.00	100	2008	2008	3	88	12,189	

VALUATION SUMMARY

VALUATION BY	DIRECT_CAP
Tax Group: 4	Tax Dist:
BUILDING MARKET VALUE	36,684,304
TOTAL MARKET OB/XF VALUE	0
TOTAL LAND VALUE - MARKET	0
TOTAL MARKET VALUE	39,874,243
SOH/AGL Deduction	0
ASSESSED VALUE	39,874,243
TOTAL EXEMPTION VALUE	0
BASE TAXABLE VALUE	39,874,243
TOTAL JUST VALUE	39,874,243
NCON VALUE	0
INCOME VALUE	39,874,243
PREVIOUS YEAR MKT VALUE	37,260,507

PERMIT NUM	DESCRIPTION	AMT	ISSUED
R10832	REPAIR/RRF	5,000	11/01/2007
R10833	REPAIR/RRF	5,000	11/01/2007
R10834	REPAIR/RRF	1,000	11/01/2007
R10835	REPAIR/RRF	5,000	11/01/2007
R10836	REPAIR/RRF	500	11/01/2007
R10837	REPAIR/RRF	1,000	11/01/2007

SALES DATA

OFF RECORD Number	DATE	TYPE INST	Q U /	V I /	RSN CD	SALE PRICE
2407/1161	11/10/2020	SW	Q	I	01	37,320,000
GRANTOR: RAIA FL SPE GROUP IV						
GRANTEE: CF COURTNEY ISLES L						
2056/0003	6/28/2016	SW	U	I	11	100
GRANTOR: DUDLEY JOHNNY L, DANI						
GRANTEE: COURTNEY ISLES LLC						

BUILDING NOTES

BUILDING DIMENSIONS

FUS=[YR=2008;LABEL=2ND FLR;ORIG=0,0] W14 S5 W3 W10 W24 N4 W12 W3 W10 W34 W10 W3 W24 W10 W3 W11 N4 W2 N1 W9 S1 W2 S5 W10 W3 S14 S14 E101 N4 N6 E10 S6 S4 E69 E17 N11 E2 N6 W2 N13 $
FUS=[YR=2008;LABEL=3RD FLR;ORIG=267,0] W14 S5 W3 W10 W24 N4 W12 W3 W10 W34 W10 W3 W24 W10 W3 W11 N4 W2 N1 W9 S1 W2 S5 W10 W3 S14 S14 E101 N4 N6 E10 S6 S4 E69 E17 N11 E2 N6 W2 N13 $
BAS=[YR=2024;LABEL=;ORIG=109,109] W14 S5 W3 W10 W24 N4 W12 W3 W10 W11 S2 W8 N2 W13 W10 W3 W24 W10 W3 W12 N4 W2 N1 W9 S1 W2 S5 W11 W3 S28 E101 N4 N6 N17 E10 S17 S6 S4 E86 N11 E2 N6 W2 N13 $
BAS=[YR=2024;LABEL=;ORIG=-90,173] E3 E10 S5 E2 S1 E9 N1 E2 N4 E12 E3 E10 E12 N1 E3 E10 S5 E2 S1 E9 N1 E2 N4 E12 E3 E10 E12

LAND DESCRIPTION

TOTAL OB/XF 110,925

LN	USE CODE	CLS	LAND USE DESCRIPTION	CAP	RD	LOC ZONE	FRONT	DEPTH	TOT LND UTS	UNIT TYPE	DT	DPTH FACT	% COND	TOT ADJ	UNIT PRICE	ADJ UNIT PRICE	LAND VALUE	OTHER ADJUSTMENTS AND NOTES	YEAR	DENSITY	DECL	FRZ	YR	CONSRV

REVIEW DATE 04/11/2025 BY KW Total Acres: 0.00 Total Land Value: 3,189,939 Market: 0 Agricultural: 0 Common: 0 PRINTED 07/30/2025 BY SYS

PT JOHN LOWE MILL GRANTS
SEC 37-2N-27E & 51-3N-27E
IN OR 2407/1161(EX UTIL ESMT'S

CF COURTNEY ISLES LLC
C/O CF REAL EST SERVICES LLC, 710 PEACHTREE ST NE STE #100
ATLANTA, GA 30308

2025

37-2N-27-0000-0001-0260

NASSAU COUNTY PROPERTY

BUILDING CHARACTERISTICS

ELEMENT	CD	CONSTRUCTION
Exterior Wall	31	HARDIE BRD 100
Roof Structur	08	IRREGULAR 100
Roof Cover	03	COMP SHNGL 100
Interior Wall	05	DRYWALL 100
Interior Floo	14	CARPET 70
Interior Floo	11	CLAY TILE 30
Air Condition	03	CENTRAL 100
Heating Type	04	AIR DUCTED 100
Bedrooms		2 100
Bathrooms		2 100
Frame	02	WOOD FRAME 100
Story Height		10 100
RMS		0 100
Units		20 100
Quality	03	Quality Level 03

DOR CODE 0300 MULTI-FAMILY
MAP NUM | MKT AREA 04
NEIGHBORHOOD/LOC 4002.00

AREA TYPE	TOTAL GROSS AREA	PCT OF BASE	YEAR	TOT ADJ AREA	SUBAREA MARKET VALUE
BAS	10,030	100	2008	10,030	1,652,924
FGR	506	55	2008	278	45,813
FOP	1,104	30	2008	331	54,548
FSP	1,456	55	2008	801	132,003
FST	168	55	2008	92	15,162
FUS	14,254	100	2008	14,254	2,349,031
STR	384	10	2008	38	6,262
UST	21	45	2008	9	1,483
TOTALS	27,923			25,833	4,257,226

MARKET ADJUSTMENTS

TYPE	MDL	EFF. AREA	TOT ADJ PTS	EFF. BASE RATE	REPL. COST NEW	AYB	EYB	ECON	FNCT		NORM	% COND
0302	03	25,833	102.9800	178.16	4,602,407	2008	2008	0	0	0	7.50	92.50

5 APART/LUX – 0% - 0 Heated Area: 24284 HX Base Yr

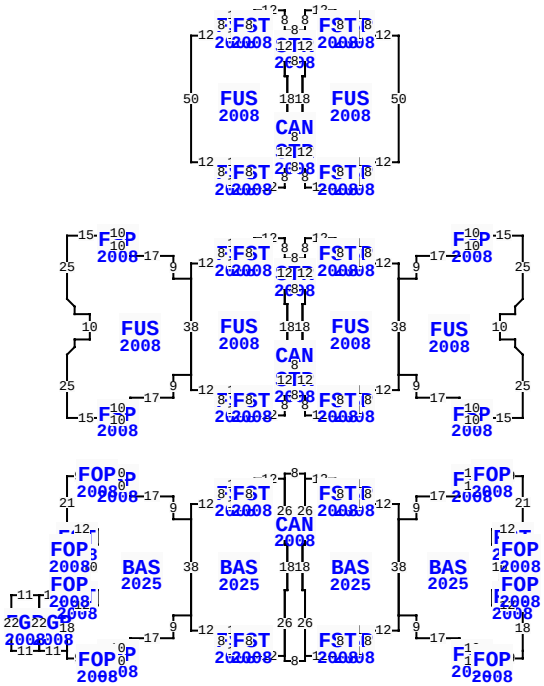

86195 COURTNEY ISLES WAY, YULEE

BLD DATE	04/11/2025	KW	LGL DATE		
XF DATE	04/11/2025	KW	LAND DATE	04/25/2025	DC
INC DATE			AG DATE		

VALUATION SUMMARY

VALUATION BY	DIRECT_CAP
Tax Group: 4	Tax Dist:
BUILDING MARKET VALUE	36,684,304
TOTAL MARKET OB/XF VALUE	0
TOTAL LAND VALUE - MARKET	0
TOTAL MARKET VALUE	39,874,243
SOH/AGL Deduction	0
ASSESSED VALUE	39,874,243
TOTAL EXEMPTION VALUE	0
BASE TAXABLE VALUE	39,874,243
TOTAL JUST VALUE	39,874,243
NCON VALUE	0
INCOME VALUE	39,874,243
PREVIOUS YEAR MKT VALUE	37,260,507

PERMIT NUM	DESCRIPTION	AMT	ISSUED
R10838	REPAIR/RRF	100	11/01/2007
R10839	REPAIR/RRF	1,000	11/01/2007
R10840	REPAIR/RRF	1,000	11/01/2007
R10841	REPAIR/RRF	5,000	11/01/2007
R10842	REPAIR/RRF	1,000	11/01/2007
R10843	REPAIR/RRF	5,000	11/01/2007

SALES DATA

OFF RECORD Number	DATE	TYPE INST	Q / U	V / I	RSN CD	SALE PRICE
2407/1161	11/10/2020	SW	Q	I	01	37,320,000
GRANTOR: RAIA FL SPE GROUP IV						
GRANTEE: CF COURTNEY ISLES L						
2056/0003	6/28/2016	SW	U	I	11	100
GRANTOR: DUDLEY JOHNNY L, DANI						
GRANTEE: COURTNEY ISLES LLC						

BUILDING NOTES

BUILDING DIMENSIONS

FUS=[YR=2008;LABEL=2ND FLR;ORIG=-82,96] W7 N9 W17 N4 W10 N4 W15 S25 D3R3 S3 E6 S10 W6 S3 D3L3 S25 E15 N4 E10 N4 E17 N9 E7 N38 $
FUS=[YR=2008;LABEL=2ND FLR;ORIG=0,96] E7 N9 E17 N4 E10 N4 E15 S25 D3L3 S3 W6 S10 E6 S3 D3R3 S25 W15 N4 W10 N4 W17 N9 W7 N38 $
BAS=[YR=2025;LABEL=;ORIG=-89,191] N9 W17 N4 W10 N4 W6 W9 S21 E12 S6 W6 S4 E3 S10 W3 S4 E6 S6 W12 S18 S3 E9 E6 N4 E10 N4 E17 N9 E7 N38 W7 $
BAS=[YR=2025;LABEL=;ORIG=0,191] E7 N9 E17 N4 E10 N4 E6 E9 S21 W12 S6 E6 S4 W3 S10 E3 S4 W6 S6 E12 S18 S3 W9 W6 N4 W10 N4 W17 N9 W7 N38 $

EXTRA FEATURES

LN	OB/XF CODE	DESCRIPTION	BLD	CAP	L	W	UNITS	UT	Adj R	ADJ UNIT PRICE	ORIG COND	YEAR ON	YEAR ACTUAL	Q	% COND	OB/XF MKT VALUE	NOTES

LAND DESCRIPTION

TOTAL OB/XF 0

LN	USE CODE	CLS	LAND USE DESCRIPTION	CAP	RD	LOC ZONE	FRONT	DEPTH	TOT LND UTS	UNIT TYPE	DT	DPTH FACT	% COND	TOT ADJ	UNIT PRICE	ADJ UNIT PRICE	LAND VALUE	OTHER ADJUSTMENTS AND NOTES	YEAR	DENSITY	DECL	FRZ	YR	CONSRV

REVIEW DATE 04/11/2025 BY KW Total Acres: 0.00 Total Land Value: 3,189,939 Market: 0 Agricultural: 0 Common: 0 PRINTED 07/30/2025 BY SYS

PT JOHN LOWE MILL GRANTS
SEC 37-2N-27E & 51-3N-27E
IN OR 2407/1161(EX UTIL ESMT'S

CF COURTNEY ISLES LLC
C/O CF REAL EST SERVICES LLC, 710 PEACHTREE ST NE STE #100
ATLANTA, GA 30308

2025

37-2N-27-0000-0001-0260

NASSAU COUNTY PROPERTY

BUILDING CHARACTERISTICS

ELEMENT	CD	CONSTRUCTION
Exterior Wall	31	HARDIE BRD 100
Roof Structur	08	IRREGULAR 100
Roof Cover	03	COMP SHNGL 100
Interior Wall	05	DRYWALL 100
Interior Floo	14	CARPET 70
Interior Floo	11	CLAY TILE 30
Air Condition	03	CENTRAL 100
Heating Type	04	AIR DUCTED 100
Bedrooms		2 100
Bathrooms		2 100
Frame	02	WOOD FRAME 100
Story Height		10 100
RMS		0 100
Units		20 100
Quality	03	Quality Level 03

DOR CODE	0300	MULTI-FAMILY	
MAP NUM		MKT AREA	04
NEIGHBORHOOD/LOC	4002.00		

AREA TYPE	TOTAL GROSS AREA	PCT OF BASE	YEAR	TOT ADJ AREA	SUBAREA MARKET VALUE
BAS	7,798	100	2008	7,798	1,298,583
FOP	1,032	30	2008	310	51,623
FSP	1,360	55	2008	748	124,562
FST	192	55	2008	106	17,652
FUS	10,902	100	2008	10,902	1,815,485
STR	384	10	2008	38	6,328
UST	28	45	2008	13	2,165
TOTALS	21,696			19,915	3,316,400

MARKET ADJUSTMENTS

TYPE	MDL	EFF. AREA	TOT ADJ PTS	EFF. BASE RATE	REPL. COST NEW	AYB	EYB	ECON	FNCT		NORM	% COND
0302	03	19,915	104.0640	180.03	3,585,297	2008	2008	0	0	0	7.50	92.50

6 APART/LUX – 0% - 0 Heated Area: 18700 HX Base Yr

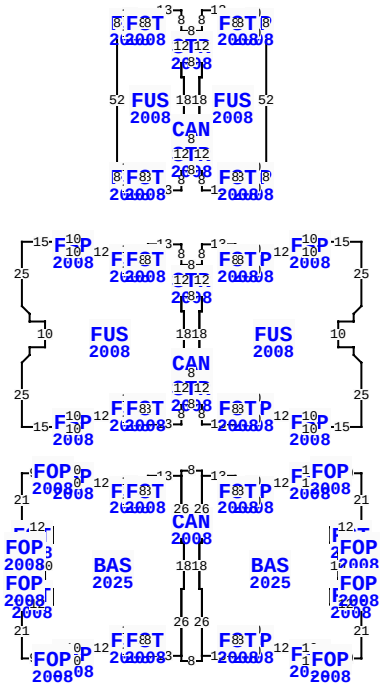

86195 COURTNEY ISLES WAY, YULEE

BLD DATE	04/11/2025	KW	LGL DATE	
XF DATE	04/11/2025	KW	LAND DATE	04/25/2025 DC
INC DATE			AG DATE	

VALUATION SUMMARY

VALUATION BY	DIRECT_CAP
Tax Group: 4	Tax Dist:
BUILDING MARKET VALUE	36,684,304
TOTAL MARKET OB/XF VALUE	0
TOTAL LAND VALUE - MARKET	0
TOTAL MARKET VALUE	39,874,243
SOH/AGL Deduction	0
ASSESSED VALUE	39,874,243
TOTAL EXEMPTION VALUE	0
BASE TAXABLE VALUE	39,874,243
TOTAL JUST VALUE	39,874,243
NCON VALUE	0
INCOME VALUE	39,874,243
PREVIOUS YEAR MKT VALUE	37,260,507

PERMIT NUM	DESCRIPTION	AMT	ISSUED
R10844	REPAIR/RRF	1,000	11/01/2007
R10845	REPAIR/RRF	5,000	11/01/2007
R10846	REPAIR/RRF	1,000	11/01/2007
R10847	REPAIR/RRF	5,000	11/01/2007
R10848	REPAIR/RRF	5,000	11/01/2007
B20637	SWIM POOL	118,210	10/01/2007

SALES DATA

OFF RECORD Number	DATE	TYPE INST	Q / U	V / I	RSN CD	SALE PRICE
2407/1161	11/10/2020	SW	Q	I	01	37,320,000
GRANTOR: RAIA FL SPE GROUP IV						
GRANTEE: CF COURTNEY ISLES L						
2056/0003	6/28/2016	SW	U	I	11	100
GRANTOR: DUDLEY JOHNNY L, DANI						
GRANTEE: COURTNEY ISLES LLC						

BUILDING NOTES

BUILDING DIMENSIONS

FUS=[YR=2008;LABEL=2ND FLR;ORIG=0,0] W15 S4 W10 W12 S7 W10 W2 N8 N2 W13 S8 S12 S6 W1 S18 E1 S6 S12 S8 E13 N2 N8 E2 E10 S7 E12 E10 S4 E15 N25 U3L3 N3 W6 N10 E6 N3 U3R3 N25 $
FUS=[YR=2008;LABEL=2ND FLR;ORIG=-70,9] N8 W13 S2 S8 W2 W10 N7 W12 W10 N4 W15 S25 D3R3 S3 E6 S10 W6 S3 D3L3 S25 E15 N4 E10 E12 N7 E10 E2 S8 S2 E13 N8 N12 N6 E1 N18 W1 N6 N12 $
BAS=[YR=2025;LABEL=;ORIG=0,90] W9 W6 S4 W10 W12 S7 W10 W2 N8 N2 W13 S26 W1 S18 E1 S26 E13 N2 N8 E2 E10 S7 E12 E10 S4 E6 E9 N21 W12 N6 E6 N4 W3 N10 E3 N4 W6 N6 E12 N21 $
BAS=[YR=2025;LABEL=;ORIG=-70,91] W13 S2 S8 W2 W10 N7 W12 W10 N4 W6 W9 S21 E12 S6 W6 S4 E3 S10 W3 S4 E6 S6 W12 S21 E9 E6 N4 E10 E12 N7 E10 E2 S8 S2 E13 N26 E1 N18 W1 N26 $

EXTRA FEATURES

LN	OB/XF CODE	DESCRIPTION	BLD	CAP	L	W	UNITS	UT	Adj R	ADJ UNIT PRICE	ORIG COND	YEAR ON	YEAR ACTUAL	Q	% COND	OB/XF MKT VALUE	NOTES

LAND DESCRIPTION

TOTAL OB/XF 0

LN	USE CODE	CLS	LAND USE DESCRIPTION	CAP	RD	LOC ZONE	FRONT	DEPTH	TOT LND UTS	UNIT TYPE	DT	DPTH FACT	% COND	TOT ADJ	UNIT PRICE	ADJ UNIT PRICE	LAND VALUE	OTHER ADJUSTMENTS AND NOTES	YEAR	DENSITY	DECL	FRZ	YR	CONSRV

REVIEW DATE 04/11/2025 BY KW Total Acres: 0.00 Total Land Value: 3,189,939 Market: 0 Agricultural: 0 Common: 0 PRINTED 07/30/2025 BY SYS

PT JOHN LOWE MILL GRANTS
SEC 37-2N-27E & 51-3N-27E
IN OR 2407/1161(EX UTIL ESMT'S

CF COURTNEY ISLES LLC
C/O CF REAL EST SERVICES LLC, 710 PEACHTREE ST NE STE #100
ATLANTA, GA 30308

2025

37-2N-27-0000-0001-0260

NASSAU COUNTY PROPERTY

BUILDING CHARACTERISTICS

ELEMENT	CD	CONSTRUCTION
Exterior Wall	31	HARDIE BRD 100
Roof Structur	08	IRREGULAR 100
Roof Cover	03	COMP SHNGL 100
Interior Wall	05	DRYWALL 100
Interior Floo	14	CARPET 70
Interior Floo	11	CLAY TILE 30
Air Condition	03	CENTRAL 100
Heating Type	04	AIR DUCTED 100
Bedrooms		2 100
Bathrooms		2 100
Frame	02	WOOD FRAME 100
Story Height		10 100
RMS		0 100
Units		20 100
Quality	03	Quality Level 03

DOR CODE 0300 MULTI-FAMILY
MAP NUM | MKT AREA 04
NEIGHBORHOOD/LOC 4002.00

AREA TYPE	TOTAL GROSS AREA	PCT OF BASE	YEAR	TOT ADJ AREA	SUBAREA MARKET VALUE
BAS	7,798	100	2008	7,798	1,298,583
FOP	1,032	30	2008	310	51,623
FSP	1,360	55	2008	748	124,562
FST	192	55	2008	106	17,652
FUS	10,902	100	2008	10,902	1,815,485
STR	384	10	2008	38	6,328
UST	28	45	2008	13	2,165
TOTALS	21,696			19,915	3,316,400

MARKET ADJUSTMENTS

TYPE	MDL	EFF. AREA	TOT ADJ PTS	EFF. BASE RATE	REPL. COST NEW	AYB	EYB	ECON	FNCT		NORM	% COND
0302	03	19,915	104.0640	180.03	3,585,297	2008	2008	0	0	0	7.50	92.50

7 APART/LUX – 0% - 0 Heated Area: 18700 HX Base Yr

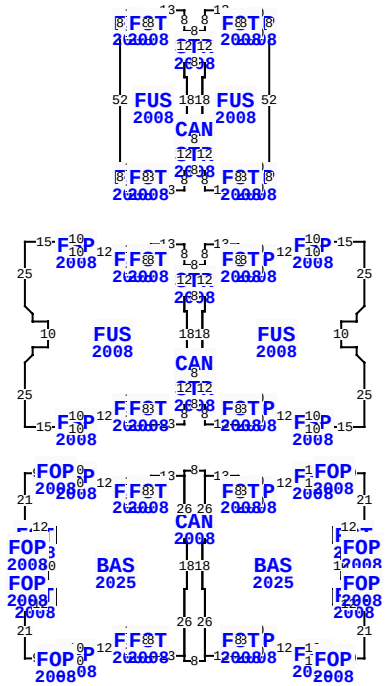

86195 COURTNEY ISLES WAY, YULEE

BLD DATE	04/11/2025	KW	LGL DATE	
XF DATE	04/11/2025	KW	LAND DATE	04/25/2025 DC
INC DATE			AG DATE	

VALUATION SUMMARY

VALUATION BY	DIRECT_CAP
Tax Group: 4	Tax Dist:
BUILDING MARKET VALUE	36,684,304
TOTAL MARKET OB/XF VALUE	0
TOTAL LAND VALUE - MARKET	0
TOTAL MARKET VALUE	39,874,243
SOH/AGL Deduction	0
ASSESSED VALUE	39,874,243
TOTAL EXEMPTION VALUE	0
BASE TAXABLE VALUE	39,874,243
TOTAL JUST VALUE	39,874,243
NCON VALUE	0
INCOME VALUE	39,874,243
PREVIOUS YEAR MKT VALUE	37,260,507

PERMIT NUM	DESCRIPTION	AMT	ISSUED
E19748	ELEC OTHER	10,000	08/01/2007
E19760	ELEC OTHER	2,000	08/01/2007
E19761	ELEC OTHER	2,000	08/01/2007
E19762	ELEC OTHER	2,000	08/01/2007
E19766	ELEC OTHER	1,500	08/01/2007
E19809	ELEC OTHER	78,000	08/01/2007

SALES DATA

OFF RECORD Number	DATE	TYPE INST	Q / U	V / I	RSN CD	SALE PRICE
2407/1161	11/10/2020	SW	Q	I	01	37,320,000
GRANTOR: RAIA FL SPE GROUP IV						
GRANTEE: CF COURTNEY ISLES L						
2056/0003	6/28/2016	SW	U	I	11	100
GRANTOR: DUDLEY JOHNNY L, DANI						
GRANTEE: COURTNEY ISLES LLC						

BUILDING NOTES

BUILDING DIMENSIONS

FUS=[YR=2008;LABEL=2ND FLR;ORIG=0,0] W15 S4 W10 W12 S7 W10 W2 N8 N2 W13 S8 S12 S6 W1 S18 E1 S6 S12 S8 E13 N2 N8 E2 E10 S7 E12 E10 S4 E15 N25 U3L3 N3 W6 N10 E6 N3 U3R3 N25 $
FUS=[YR=2008;LABEL=2ND FLR;ORIG=-70,9] N8 W13 S2 S8 W2 W10 N7 W12 W10 N4 W15 S25 D3R3 S3 E6 S10 W6 S3 D3L3 S25 E15 N4 E10 E12 N7 E10 E2 S8 S2 E13 N8 N12 N6 E1 N18 W1 N6 N12 $
BAS=[YR=2025;LABEL=;ORIG=0,90] W9 W6 S4 W10 W12 S7 W10 W2 N8 N2 W13 S26 W1 S18 E1 S26 E13 N2 N8 E2 E10 S7 E12 E10 S4 E6 E9 N21 W12 N6 E6 N4 W3 N10 E3 N4 W6 N6 E12 N21 $
BAS=[YR=2025;LABEL=;ORIG=-70,91] W13 S2 S8 W2 W10 N7 W12 W10 N4 W6 W9 S21 E12 S6 W6 S4 E3 S10 W3 S4 E6 S6 W12 S21 E9 E6 N4 E10 E12 N7 E10 E2 S8 S2 E13 N26 E1 N18 W1 N26 $

EXTRA FEATURES

L N	OB/XF CODE	DESCRIPTION	BLD	CAP	L	W	UNITS	UT	Adj R	ADJ UNIT PRICE	ORIG COND	YEAR ON	YEAR ACTUAL	Q	% COND	OB/XF MKT VALUE	NOTES

LAND DESCRIPTION

TOTAL OB/XF 0

L N	USE CODE	CLS	LAND USE DESCRIPTION	CAP	R D	LOC ZONE	FRONT	DEPTH	TOT LND UTS	UNIT TYPE	D T	DPTH FACT	% COND	TOT ADJ	UNIT PRICE	ADJ UNIT PRICE	LAND VALUE	OTHER ADJUSTMENTS AND NOTES	YEAR	DENSITY	DECL	FRZ	YR	CONSRV

REVIEW DATE 04/11/2025 BY KW Total Acres: 0.00 Total Land Value: 3,189,939 Market: 0 Agricultural: 0 Common: 0 PRINTED 07/30/2025 BY SYS

PT JOHN LOWE MILL GRANTS
SEC 37-2N-27E & 51-3N-27E
IN OR 2407/1161(EX UTIL ESMT'S

CF COURTNEY ISLES LLC
C/O CF REAL EST SERVICES LLC, 710 PEACHTREE ST NE STE #100
ATLANTA, GA 30308

2025

37-2N-27-0000-0001-0260

NASSAU COUNTY PROPERTY

BUILDING CHARACTERISTICS

ELEMENT	CD	CONSTRUCTION
Exterior Wall	31	HARDIE BRD 100
Roof Structur	08	IRREGULAR 100
Roof Cover	03	COMP SHNGL 100
Interior Wall	05	DRYWALL 100
Interior Floo	14	CARPET 70
Interior Floo	11	CLAY TILE 30
Air Condition	03	CENTRAL 100
Heating Type	04	AIR DUCTED 100
Bedrooms		2 100
Bathrooms		2 100
Frame	02	WOOD FRAME 100
Story Height		10 100
RMS		0 100
Units		20 100
Quality	03	Quality Level 03

DOR CODE	0300	MULTI-FAMILY	
MAP NUM		MKT AREA	04
NEIGHBORHOOD/LOC	4002.00		

AREA TYPE	TOTAL GROSS AREA	PCT OF BASE	YEAR	TOT ADJ AREA	SUBAREA MARKET VALUE
BAS	7,798	100	2008	7,798	1,298,583
FGR	481	55	2008	265	44,130
FOP	1,030	30	2008	309	51,457
FSP	1,360	55	2008	748	124,562
FST	192	55	2008	106	17,652
FUS	10,902	100	2008	10,902	1,815,485
STR	384	10	2008	38	6,328
UST	28	45	2008	13	2,165
TOTALS	22,175			20,179	3,360,363

MARKET ADJUSTMENTS

TYPE	MDL	EFF. AREA	TOT ADJ PTS	EFF. BASE RATE	REPL. COST NEW	AYB	EYB	ECON	FNCT		NORM	% COND
0302	03	20,179	104.0640	180.03	3,632,825	2008	2008	0	0	0	7.50	92.50

8 APART/LUX – 0% - 0 Heated Area: 18700 HX Base Yr

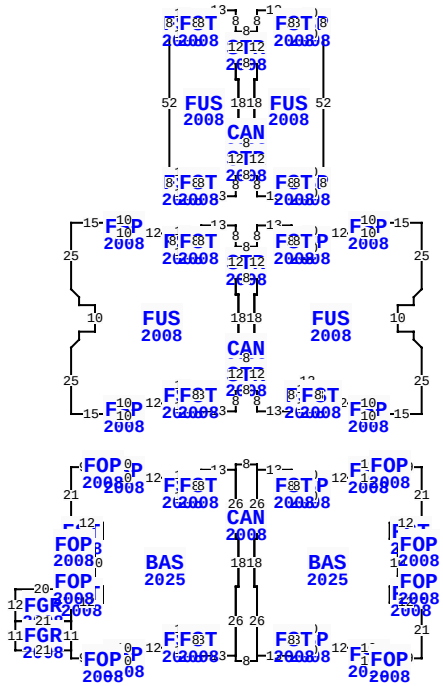

86195 COURTNEY ISLES WAY, YULEE

BLD DATE	04/11/2025	KW	LGL DATE	
XF DATE	04/11/2025	KW	LAND DATE	04/25/2025 DC
INC DATE			AG DATE	

VALUATION SUMMARY

VALUATION BY	DIRECT_CAP
Tax Group: 4	Tax Dist:
BUILDING MARKET VALUE	36,684,304
TOTAL MARKET OB/XF VALUE	0
TOTAL LAND VALUE - MARKET	0
TOTAL MARKET VALUE	39,874,243
SOH/AGL Deduction	0
ASSESSED VALUE	39,874,243
TOTAL EXEMPTION VALUE	0
BASE TAXABLE VALUE	39,874,243
TOTAL JUST VALUE	39,874,243
NCON VALUE	0
INCOME VALUE	39,874,243
PREVIOUS YEAR MKT VALUE	37,260,507

PERMIT NUM	DESCRIPTION	AMT	ISSUED
E19810	ELEC OTHER	78,000	08/01/2007
E19811	ELEC OTHER	40,000	08/01/2007
E19812	ELEC OTHER	78,000	08/01/2007
E19813	ELEC OTHER	40,000	08/01/2007
E19814	ELEC OTHER	40,000	08/01/2007
E19815	ELEC OTHER	40,000	08/01/2007

SALES DATA

OFF RECORD Number	DATE	TYPE INST	Q / U	V / I	RSN CD	SALE PRICE
2407/1161	11/10/2020	SW	Q	I	01	37,320,000
GRANTOR: RAIA FL SPE GROUP IV						
GRANTEE: CF COURTNEY ISLES L						
2056/0003	6/28/2016	SW	U	I	11	100
GRANTOR: DUDLEY JOHNNY L, DANI						
GRANTEE: COURTNEY ISLES LLC						

BUILDING NOTES

BUILDING DIMENSIONS

FUS=[YR=2008;LABEL=2ND FLR;ORIG=-70,9] N8 W13 S2 S8 W2 W10 N7 W12 W10 N4 W15 S25 D3R3 S3 E6 S10 W6 S3 D3L3 S25 E15 N4 E10 E12 N7 E10 E2 S8 S2 E13 N8 N12 N6 E1 N18 W1 N6 N12 $
FUS=[YR=2008;LABEL=2ND FLR;ORIG=0,0] W15 S4 W10 W12 S7 W12 N8 N2 W13 S8 S12 S6 W1 S18 E1 S6 S12 S8 E13 N2 N8 E12 S7 E12 E10 S4 E15 N25 U3L3 N3 W6 N10 E6 N3 U3R3 N25 $
BAS=[YR=2025;LABEL=;ORIG=-70,93] W13 S2 S8 W2 W10 N7 W12 W10 N4 W6 W9 S21 E12 S6 W6 S4 E3 S10 W3 S4 E6 S6 W12 S7 S11 S3 E9 E6 N4 E10 E12 N7 E10 E2 S8 S2 E13 N26 E1 N18 W1 N26 $
BAS=[YR=2025;LABEL=;ORIG=0,92] W9 W6 S4 W10 W12 S7 W10 W2 N8 N2 W13 S26 W1 S18 E1 S26 E13 N2 N8 E2 E10 S7 E12 E10 S4 E6 E9 N21 W12 N6 E6 N4 W3 N10 E3 N4 W6 N6 E12 N21 $

EXTRA FEATURES

LN	OB/XF CODE	DESCRIPTION	BLD	CAP	L	W	UNITS	UT	Adj R	ADJ UNIT PRICE	ORIG COND	YEAR ON	YEAR ACTUAL	Q	% COND	OB/XF MKT VALUE	NOTES

LAND DESCRIPTION

TOTAL OB/XF 0

LN	USE CODE	CLS	LAND USE DESCRIPTION	CAP	RD	LOC ZONE	FRONT	DEPTH	TOT LND UTS	UNIT TYPE	DT	DPTH FACT	% COND	TOT ADJ	UNIT PRICE	ADJ UNIT PRICE	LAND VALUE	OTHER ADJUSTMENTS AND NOTES	YEAR	DENSITY	DECL	FRZ	YR	CONSRV

REVIEW DATE 04/11/2025 BY KW Total Acres: 0.00 Total Land Value: 3,189,939 Market: 0 Agricultural: 0 Common: 0 PRINTED 07/30/2025 BY SYS

PT JOHN LOWE MILL GRANTS
SEC 37-2N-27E & 51-3N-27E
IN OR 2407/1161(EX UTIL ESMT'S

CF COURTNEY ISLES LLC
C/O CF REAL EST SERVICES LLC, 710 PEACHTREE ST NE STE #100
ATLANTA, GA 30308

2025

37-2N-27-0000-0001-0260

NASSAU COUNTY PROPERTY

BUILDING CHARACTERISTICS

ELEMENT	CD	CONSTRUCTION
Exterior Wall	31	HARDIE BRD 100
Roof Structur	08	IRREGULAR 100
Roof Cover	03	COMP SHNGL 100
Interior Wall	05	DRYWALL 100
Interior Floo	14	CARPET 70
Interior Floo	11	CLAY TILE 30
Air Condition	03	CENTRAL 100
Heating Type	04	AIR DUCTED 100
Bedrooms		2 100
Bathrooms		2 100
Frame	02	WOOD FRAME 100
Story Height		10 100
RMS		0 100
Units		20 100
Quality	03	Quality Level 03

DOR CODE	0300	MULTI-FAMILY	
MAP NUM		MKT AREA	04
NEIGHBORHOOD/LOC	4002.00		

AREA TYPE	TOTAL GROSS AREA	PCT OF BASE	YEAR	TOT ADJ AREA	SUBAREA MARKET VALUE
BAS	7,798	100	2008	7,798	1,298,583
FOP	1,032	30	2008	310	51,623
FSP	1,360	55	2008	748	124,562
FST	192	55	2008	106	17,652
FUS	10,902	100	2008	10,902	1,815,485
STR	384	10	2008	38	6,328
UST	28	45	2008	13	2,165
TOTALS	21,696			19,915	3,316,400

MARKET ADJUSTMENTS

TYPE	MDL	EFF. AREA	TOT ADJ PTS	EFF. BASE RATE	REPL. COST NEW	AYB	EYB	ECON	FNCT		NORM	% COND
0302	03	19,915	104.0640	180.03	3,585,297	2008	2008	0	0	0	7.50	92.50

9 APART/LUX – 0% - 0 Heated Area: 18700 HX Base Yr

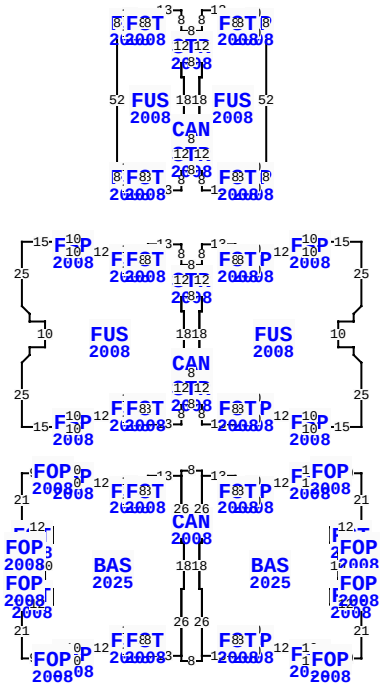

86195 COURTNEY ISLES WAY, YULEE

BLD DATE	04/11/2025	KW	LGL DATE		
XF DATE	04/11/2025	KW	LAND DATE	04/25/2025	DC
INC DATE			AG DATE		

VALUATION SUMMARY

VALUATION BY	DIRECT_CAP
Tax Group: 4	Tax Dist:
BUILDING MARKET VALUE	36,684,304
TOTAL MARKET OB/XF VALUE	0
TOTAL LAND VALUE - MARKET	0
TOTAL MARKET VALUE	39,874,243
SOH/AGL Deduction	0
ASSESSED VALUE	39,874,243
TOTAL EXEMPTION VALUE	0
BASE TAXABLE VALUE	39,874,243
TOTAL JUST VALUE	39,874,243
NCON VALUE	0
INCOME VALUE	39,874,243
PREVIOUS YEAR MKT VALUE	37,260,507

PERMIT NUM	DESCRIPTION	AMT	ISSUED
E19817	ELEC OTHER	40,000	08/01/2007
E19818	ELEC OTHER	40,000	08/01/2007
E19819	ELEC OTHER	6,000	08/01/2007
E19820	ELEC OTHER	1,200	08/01/2007
E19821	ELEC OTHER	1,000	08/01/2007
E19822	ELEC OTHER	2,000	08/01/2007

SALES DATA

OFF RECORD Number	DATE	TYPE INST	Q / U	V / I	RSN CD	SALE PRICE
2407/1161	11/10/2020	SW	Q	I	01	37,320,000
GRANTOR: RAIA FL SPE GROUP IV						
GRANTEE: CF COURTNEY ISLES L						
2056/0003	6/28/2016	SW	U	I	11	100
GRANTOR: DUDLEY JOHNNY L, DANI						
GRANTEE: COURTNEY ISLES LLC						

BUILDING NOTES

BUILDING DIMENSIONS

FUS=[YR=2008;LABEL=2ND FLR;ORIG=0,0] W15 S4 W10 W12 S7 W10 W2 N8 N2 W13 S8 S12 S6 W1 S18 E1 S6 S12 S8 E13 N2 N8 E2 E10 S7 E12 E10 S4 E15 N25 U3L3 N3 W6 N10 E6 N3 U3R3 N25 $
FUS=[YR=2008;LABEL=2ND FLR;ORIG=-70,9] N8 W13 S2 S8 W2 W10 N7 W12 W10 N4 W15 S25 D3R3 S3 E6 S10 W6 S3 D3L3 S25 E15 N4 E10 E12 N7 E10 E2 S8 S2 E13 N8 N12 N6 E1 N18 W1 N6 N12 $
BAS=[YR=2025;LABEL=;ORIG=0,90] W9 W6 S4 W10 W12 S7 W10 W2 N8 N2 W13 S26 W1 S18 E1 S26 E13 N2 N8 E2 E10 S7 E12 E10 S4 E6 E9 N21 W12 N6 E6 N4 W3 N10 E3 N4 W6 N6 E12 N21 $
BAS=[YR=2025;LABEL=;ORIG=-70,91] W13 S2 S8 W2 W10 N7 W12 W10 N4 W6 W9 S21 E12 S6 W6 S4 E3 S10 W3 S4 E6 S6 W12 S21 E9 E6 N4 E10 E12 N7 E10 E2 S8 S2 E13 N26 E1 N18 W1 N26 $

EXTRA FEATURES

L N	OB/XF CODE	DESCRIPTION	BLD	CAP	L	W	UNITS	UT	Adj R	ADJ UNIT PRICE	ORIG COND	YEAR ON	YEAR ACTUAL	Q	% COND	OB/XF MKT VALUE	NOTES

LAND DESCRIPTION

TOTAL OB/XF 0

L N	USE CODE	CLS	LAND USE DESCRIPTION	CAP	R D	LOC ZONE	FRONT	DEPTH	TOT LND UTS	UNIT TYPE	D T	DPTH FACT	% COND	TOT ADJ	UNIT PRICE	ADJ UNIT PRICE	LAND VALUE	OTHER ADJUSTMENTS AND NOTES	YEAR	DENSITY	DECL	FRZ	YR	CONSRV

REVIEW DATE 04/11/2025 BY KW Total Acres: 0.00 Total Land Value: 3,189,939 Market: 0 Agricultural: 0 Common: 0 PRINTED 07/30/2025 BY SYS

PT JOHN LOWE MILL GRANTS
SEC 37-2N-27E & 51-3N-27E
IN OR 2407/1161(EX UTIL ESMT'S

CF COURTNEY ISLES LLC
C/O CF REAL EST SERVICES LLC, 710 PEACHTREE ST NE STE #100
ATLANTA, GA 30308

2025

37-2N-27-0000-0001-0260

BUILDING CHARACTERISTICS

ELEMENT	CD	CONSTRUCTION
Exterior Wall	31	HARDIE BRD 100
Roof Structur	08	IRREGULAR 100
Roof Cover	03	COMP SHNGL 100
Interior Wall	05	DRYWALL 100
Interior Floo	14	CARPET 70
Interior Floo	11	CLAY TILE 30
Air Condition	03	CENTRAL 100
Heating Type	04	AIR DUCTED 100
Bedrooms		2 100
Bathrooms		2.5 100
Frame	02	WOOD FRAME 100
Story Height		10 100
RMS		0 100
Units		3 100
Quality	03	Quality Level 03

DOR CODE	0300	MULTI-FAMILY	
MAP NUM		MKT AREA	04
NEIGHBORHOOD/LOC	4002.00		

AREA TYPE	TOTAL GROSS AREA	PCT OF BASE	YEAR	TOT ADJ AREA	SUBAREA MARKET VALUE
BAS	73	100	2008	73	13,036
BAS	73	100	2008	73	13,036
BAS	73	100	2008	73	13,036
FGR	647	55	2008	356	63,572
FGR	647	55	2008	356	63,572
FGR	647	55	2008	356	63,572
FOP	24	30	2008	7	1,250
FOP	30	30	2008	9	1,607
FOP	30	30	2008	9	1,607
FSP	50	55	2008	28	5,000
TOTALS	6,804			5,803	1,036,249

MARKET ADJUSTMENTS

TYPE	MDL	EFF. AREA	TOT ADJ PTS	EFF. BASE RATE	REPL. COST NEW	AYB	EYB	ECON	FNCT		NORM	% COND
0302	03	5,803	111.5880	193.05	1,120,269	2008	2008	0	0	0	7.50	92.50

10 APART/LUX – 0% - 0 Heated Area: 4623 HX Base Yr

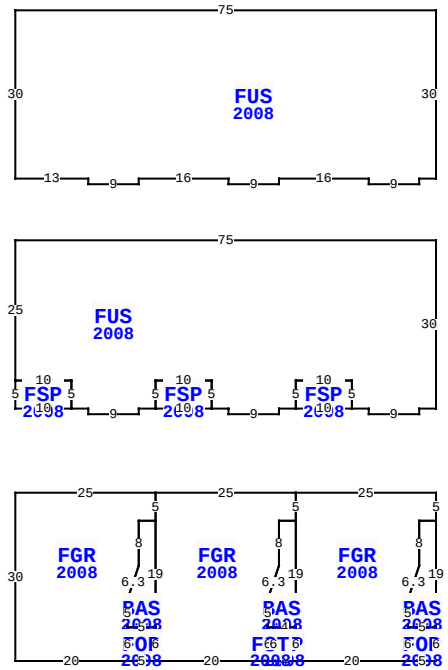

** This building has 15 Sub-Areas

86195 COURTNEY ISLES WAY, YULEE

BLD DATE	04/11/2025	KW	LGL DATE		
XF DATE	04/11/2025	KW	LAND DATE	04/25/2025	DC
INC DATE			AG DATE		

NASSAU COUNTY PROPERTY

PAGE 10 of 20 4

VALUATION SUMMARY

VALUATION BY	DIRECT_CAP
Tax Group: 4	Tax Dist:
BUILDING MARKET VALUE	36,684,304
TOTAL MARKET OB/XF VALUE	0
TOTAL LAND VALUE - MARKET	0
TOTAL MARKET VALUE	39,874,243
SOH/AGL Deduction	0
ASSESSED VALUE	39,874,243
TOTAL EXEMPTION VALUE	0
BASE TAXABLE VALUE	39,874,243
TOTAL JUST VALUE	39,874,243
NCON VALUE	0
INCOME VALUE	39,874,243
PREVIOUS YEAR MKT VALUE	37,260,507

PERMIT NUM	DESCRIPTION	AMT	ISSUED
E19823	ELEC OTHER	1,500	08/01/2007
E19824	ELEC OTHER	1,500	08/01/2007
E19825	ELEC OTHER	800	08/01/2007
E19826	ELEC OTHER	800	08/01/2007
E19828	ELEC OTHER	800	08/01/2007
E19832	ELEC OTHER	800	08/01/2007

SALES DATA

OFF RECORD Number	DATE	TYPE INST	Q / U	V / I	RSN CD	SALE PRICE
2407/1161	11/10/2020	SW	Q	I	01	37,320,000
GRANTOR: RAIA FL SPE GROUP IV						
GRANTEE: CF COURTNEY ISLES L						
2056/0003	6/28/2016	SW	U	I	11	100
GRANTOR: DUDLEY JOHNNY L, DANI						
GRANTEE: COURTNEY ISLES LLC						

BUILDING NOTES

BUILDING DIMENSIONS

FUS=[YR=2008;LABEL=3RD FLR;ORIG=0,-56] N30 W75 S30 E13 S1 E9 N1 E16 S1 E9 N1 E16 S1 E9 N1 E3 $
FUS=[YR=2008;LABEL=2ND FLR;ORIG=0,-15] N30 W75 S25 E10 S5 E3 S1 E9 N1 E3 N5 E10 S5 E3 S1 E9 N1 E3 N5 E10 S5 E3 S1 E9 N1 E3 $
FGR=[YR=2008;ORIG=0,0] W25 S5 S19 S6 E20 N6 N5 U6R2 N8 E3 N5 $
FGR=[YR=2008;ORIG=-25,0] W25 S5 S19 S6 E20 N6 N5 U6R2 N8 E3 N5 $
FGR=[YR=2008;ORIG=-50,0] W25 S30 E20 N6 N5 U6R2 N8 E3 N5 $
BAS=[YR=2008;ORIG=-50,5] W3 S8 D6L2 S5 E5 N19 $
BAS=[YR=2008;ORIG=-25,5] W3 S8 D6L2 S5 E1 E4 N19 $

EXTRA FEATURES

LN	OB/XF CODE	DESCRIPTION	BLD	CAP	L	W	UNITS	UT	Adj R	ADJ UNIT PRICE	ORIG COND	YEAR ON	YEAR ACTUAL	Q	% COND	OB/XF MKT VALUE	NOTES

LAND DESCRIPTION

TOTAL OB/XF 0

LN	USE CODE	CLS	LAND USE DESCRIPTION	CAP	RD	LOC ZONE	FRONT	DEPTH	TOT LND UTS	UNIT TYPE	DT	DPTH FACT	% COND	TOT ADJ	UNIT PRICE	ADJ UNIT PRICE	LAND VALUE	OTHER ADJUSTMENTS AND NOTES	YEAR	DENSITY	DECL	FRZ	YR	CONSRV

REVIEW DATE 04/11/2025 BY KW Total Acres: 0.00 Total Land Value: 3,189,939 Market: 0 Agricultural: 0 Common: 0 PRINTED 07/30/2025 BY SYS

PT JOHN LOWE MILL GRANTS
SEC 37-2N-27E & 51-3N-27E
IN OR 2407/1161(EX UTIL ESMT'S

CF COURTNEY ISLES LLC
C/O CF REAL EST SERVICES LLC, 710 PEACHTREE ST NE STE #100
ATLANTA, GA 30308

2025

37-2N-27-0000-0001-0260

BUILDING CHARACTERISTICS

ELEMENT	CD	CONSTRUCTION
Exterior Wall	31	HARDIE BRD 100
Roof Structur	04	WOOD TRUSS 100
Roof Cover	03	COMP SHNGL 100
Interior Wall	05	DRYWALL 100
Interior Floo	11	CLAY TILE 60
Interior Floo	14	CARPET 40
Ceiling	02	F.NOT SUS 100
Air Condition	03	CENTRAL 100
Heating Type	04	AIR DUCTED 100
Fixtures		14 100
Frame	02	WOOD FRAME 100
Story Height		10 100
RMS		10 100
Stories	1.	1. 100
Units		0 100
Occupancy	00	NONE 100
Quality	03	Quality Level 03

DOR CODE 0300 MULTI-FAMILY
MAP NUM | MKT AREA 04
NEIGHBORHOOD/LOC 4002.00

AREA TYPE	TOTAL GROSS AREA	PCT OF BASE	YEAR	TOT ADJ AREA	SUBAREA MARKET VALUE
BAS	4,415	100	2008	4,415	504,686
FOP	416	30	2008	125	14,289
FOP	909	30	2008	273	31,207
FST	110	50	2008	55	6,287
TOTALS	5,850			4,868	556,468

MARKET ADJUSTMENTS

TYPE	MDL	EFF. AREA	TOT ADJ PTS	EFF. BASE RATE	REPL. COST NEW	AYB	EYB	ECON	FNCT		NORM	% COND
0303	04	4,868	113.3730	123.58	601,587	2008	2008	0	0	0	7.50	92.50

11 CLUB HOUSE – 0% - 0 Heated Area: 4415 HX Base Yr

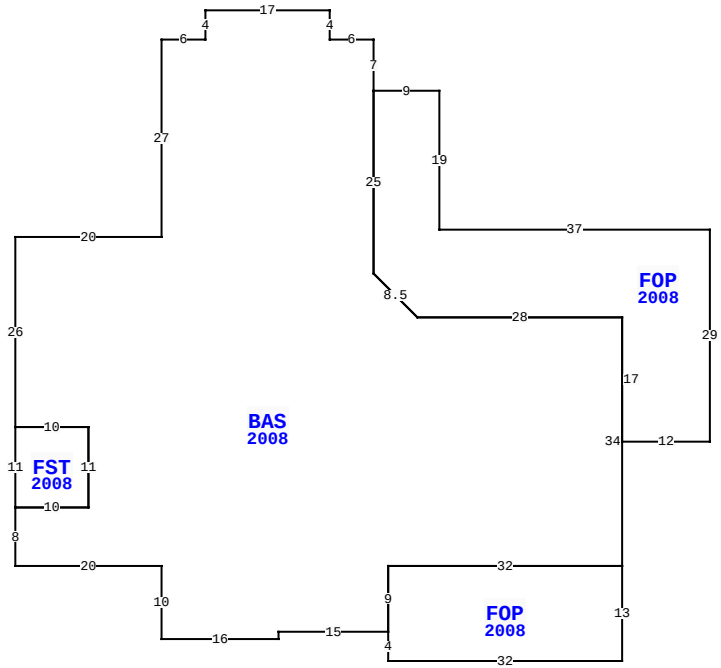

86195 COURTNEY ISLES WAY, YULEE

BLD DATE	04/11/2025	KW	LGL DATE	
XF DATE	04/11/2025	KW	LAND DATE	04/25/2025 DC
INC DATE			AG DATE	

NASSAU COUNTY PROPERTY

VALUATION SUMMARY

VALUATION BY	DIRECT_CAP
Tax Group: 4	Tax Dist:
BUILDING MARKET VALUE	36,684,304
TOTAL MARKET OB/XF VALUE	0
TOTAL LAND VALUE - MARKET	0
TOTAL MARKET VALUE	39,874,243
SOH/AGL Deduction	0
ASSESSED VALUE	39,874,243
TOTAL EXEMPTION VALUE	0
BASE TAXABLE VALUE	39,874,243
TOTAL JUST VALUE	39,874,243
NCON VALUE	0
INCOME VALUE	39,874,243
PREVIOUS YEAR MKT VALUE	37,260,507

PERMIT NUM	DESCRIPTION	AMT	ISSUED
E19833	ELEC OTHER	800	08/01/2007
E19834	ELEC OTHER	800	08/01/2007
E19835	ELEC OTHER	800	08/01/2007
P12587	OTHER	0	08/01/2007
P12588	OTHER	0	08/01/2007
P12589	OTHER	0	08/01/2007

SALES DATA

OFF RECORD Number	DATE	TYPE INST	Q / U	V / I	RSN CD	SALE PRICE
2407/1161	11/10/2020	SW	Q	I	01	37,320,000
GRANTOR: RAIA FL SPE GROUP IV						
GRANTEE: CF COURTNEY ISLES L						
2056/0003	6/28/2016	SW	U	I	11	100
GRANTOR: DUDLEY JOHNNY L, DANI						
GRANTEE: COURTNEY ISLES LLC						

BUILDING NOTES

BUILDING DIMENSIONS

FOP=[YR=2008] W37N19W9BAS=[YR=2008] N7W6N4
W17S4W6S27W20S26FST=[YR=2008] S11E10
N11W10$E10S11W10S8E20S10E16N1 E15FOP=[YR=2008]
S4E32N13W32S9$N9E32 N34W28 U6 L6 N25$S25 D6 R6 E28
S17E12N29$.

EXTRA FEATURES

LN	OB/XF CODE	DESCRIPTION	BLD	CAP	L	W	UNITS	UT	Adj R	ADJ UNIT PRICE	ORIG COND	YEAR ON	YEAR ACTUAL	Q	% COND	OB/XF MKT VALUE	NOTES

LAND DESCRIPTION

TOTAL OB/XF 0

LN	USE CODE	CLS	LAND USE DESCRIPTION	CAP	RD	LOC ZONE	FRONT	DEPTH	TOT LND UTS	UNIT TYPE	DT	DPTH FACT	% COND	TOT ADJ	UNIT PRICE	ADJ UNIT PRICE	LAND VALUE	OTHER ADJUSTMENTS AND NOTES	YEAR	DENSITY	DECL	FRZ	YR	CONSRV

REVIEW DATE 04/11/2025 BY KW Total Acres: 0.00 Total Land Value: 3,189,939 Market: 0 Agricultural: 0 Common: 0 PRINTED 07/30/2025 BY SYS

PT JOHN LOWE MILL GRANTS
SEC 37-2N-27E & 51-3N-27E
IN OR 2407/1161(EX UTIL ESMT'S

CF COURTNEY ISLES LLC
C/O CF REAL EST SERVICES LLC, 710 PEACHTREE ST NE STE #100
ATLANTA, GA 30308

2025

37-2N-27-0000-0001-0260

NASSAU COUNTY PROPERTY

BUILDING CHARACTERISTICS

ELEMENT	CD	CONSTRUCTION
Exterior Wall	31	HARDIE BRD 100
Roof Structur	04	WOOD TRUSS 100
Roof Cover	03	COMP SHNGL 100
Interior Wall	05	DRYWALL 100
Interior Floo	03	CONC FINSH 100
Ceiling	02	F.NOT SUS 100
Air Condition	01	NONE 100
Heating Type	01	NONE 100
Fixtures		0 100
Frame	02	WOOD FRAME 100
Story Height		9 100
RMS		16 100
Stories	1.	1. 100
Units		0 100
Occupancy	00	NONE 100
Quality	03	Quality Level 03

DOR CODE	0300	MULTI-FAMILY	
MAP NUM		MKT AREA	04
NEIGHBORHOOD/LOC	4002.00		

AREA TYPE	TOTAL GROSS AREA	PCT OF BASE	YEAR	TOT ADJ AREA	SUBAREA MARKET VALUE
BAS	4,268	100	2008	4,268	101,225
TOTALS	4,268			4,268	101,225

MARKET ADJUSTMENTS

TYPE	MDL	EFF. AREA	TOT ADJ PTS	EFF. BASE RATE	REPL. COST NEW	AYB	EYB	ECON	FNCT		NORM	% COND
0304	04	4,268	79.5057	25.64	109,432	2008	2008	0	0	0	7.50	92.50

12 APART/GAR – 0% - 0 Heated Area: 4268 HX Base Yr

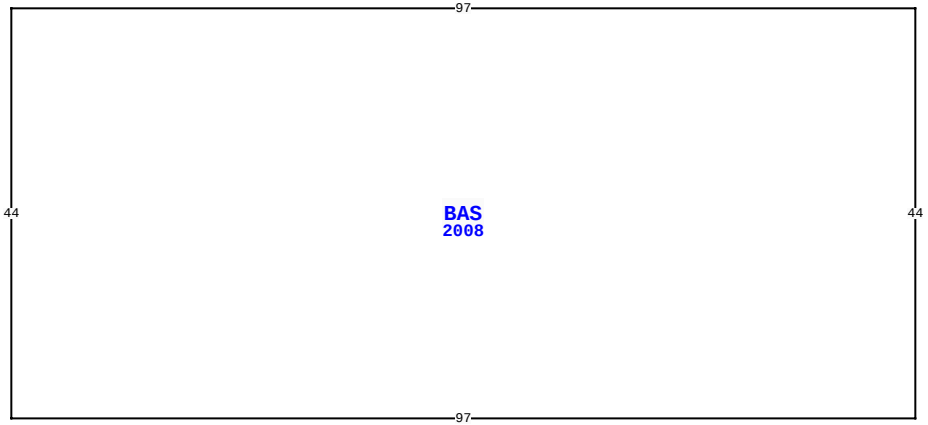

86195 COURTNEY ISLES WAY, YULEE

BLD DATE	04/11/2025	KW	LGL DATE	
XF DATE	04/11/2025	KW	LAND DATE	04/25/2025 DC
INC DATE			AG DATE	

VALUATION SUMMARY

VALUATION BY	DIRECT_CAP
Tax Group: 4	Tax Dist:
BUILDING MARKET VALUE	36,684,304
TOTAL MARKET OB/XF VALUE	0
TOTAL LAND VALUE - MARKET	0
TOTAL MARKET VALUE	39,874,243
SOH/AGL Deduction	0
ASSESSED VALUE	39,874,243
TOTAL EXEMPTION VALUE	0
BASE TAXABLE VALUE	39,874,243
TOTAL JUST VALUE	39,874,243
NCON VALUE	0
INCOME VALUE	39,874,243
PREVIOUS YEAR MKT VALUE	37,260,507

PERMIT NUM	DESCRIPTION	AMT	ISSUED
P12590	OTHER	0	08/01/2007
P12591	OTHER	0	08/01/2007
P12592	OTHER	0	08/01/2007
P12593	OTHER	0	08/01/2007
P12594	OTHER	0	08/01/2007
P12595	OTHER	0	08/01/2007

SALES DATA

OFF RECORD Number	DATE	TYPE INST	Q / U	V / I	RSN CD	SALE PRICE
2407/1161	11/10/2020	SW	Q	I	01	37,320,000
GRANTOR: RAIA FL SPE GROUP IV						
GRANTEE: CF COURTNEY ISLES L						
2056/0003	6/28/2016	SW	U	I	11	100
GRANTOR: DUDLEY JOHNNY L, DANI						
GRANTEE: COURTNEY ISLES LLC						

BUILDING NOTES

BUILDING DIMENSIONS

BAS=[YR=2008] W97S44E97N44$.

EXTRA FEATURES

LN	OB/XF CODE	DESCRIPTION	BLD	CAP	L	W	UNITS	UT	Adj R	ADJ UNIT PRICE	ORIG COND	YEAR ON	YEAR ACTUAL	Q	% COND	OB/XF MKT VALUE	NOTES

LAND DESCRIPTION

TOTAL OB/XF 0

LN	USE CODE	CLS	LAND USE DESCRIPTION	CAP	RD	LOC ZONE	FRONT	DEPTH	TOT LND UTS	UNIT TYPE	DT	DPTH FACT	% COND	TOT ADJ	UNIT PRICE	ADJ UNIT PRICE	LAND VALUE	OTHER ADJUSTMENTS AND NOTES	YEAR	DENSITY	DECL	FRZ	YR	CONSRV

REVIEW DATE 04/11/2025 BY KW Total Acres: 0.00 Total Land Value: 3,189,939 Market: 0 Agricultural: 0 Common: 0 PRINTED 07/30/2025 BY SYS

PT JOHN LOWE MILL GRANTS
SEC 37-2N-27E & 51-3N-27E
IN OR 2407/1161(EX UTIL ESMT'S

CF COURTNEY ISLES LLC
C/O CF REAL EST SERVICES LLC, 710 PEACHTREE ST NE STE #100
ATLANTA, GA 30308

2025

37-2N-27-0000-0001-0260

BUILDING CHARACTERISTICS

ELEMENT	CD	CONSTRUCTION
Exterior Wall	31	HARDIE BRD 100
Roof Structur	04	WOOD TRUSS 100
Roof Cover	03	COMP SHNGL 100
Interior Wall	05	DRYWALL 100
Interior Floo	03	CONC FINSH 100
Ceiling	02	F.NOT SUS 100
Air Condition	01	NONE 100
Heating Type	01	NONE 100
Fixtures		0 100
Frame	02	WOOD FRAME 100
Story Height		9 100
RMS		8 100
Stories	1.	1. 100
Units		0 100
Occupancy	00	NONE 100
Quality	03	Quality Level 03

DOR CODE	0300	MULTI-FAMILY	
MAP NUM		MKT AREA	04
NEIGHBORHOOD/LOC	4002.00		

AREA TYPE	TOTAL GROSS AREA	PCT OF BASE	YEAR	TOT ADJ AREA	SUBAREA MARKET VALUE
BAS	2,134	100	2008	2,134	51,599
TOTALS	2,134			2,134	51,599

MARKET ADJUSTMENTS

TYPE	MDL	EFF. AREA	TOT ADJ PTS	EFF. BASE RATE	REPL. COST NEW	AYB	EYB	ECON	FNCT		NORM	% COND
0304	04	2,134	81.0495	26.14	55,783	2008	2008	0	0	0	7.50	92.50

13 APART/GAR – 0% - 0 Heated Area: 2134 HX Base Yr

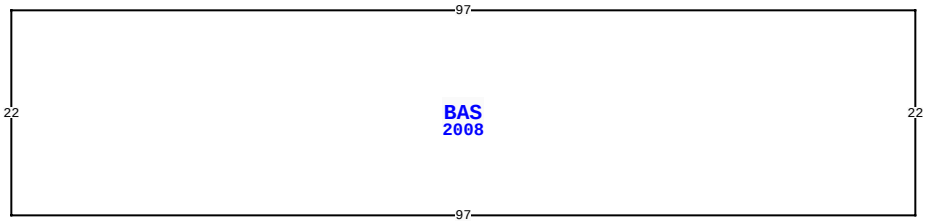

86195 COURTNEY ISLES WAY, YULEE

BLD DATE	04/11/2025	KW	LGL DATE	
XF DATE	04/11/2025	KW	LAND DATE	04/25/2025 DC
INC DATE			AG DATE	

NASSAU COUNTY PROPERTY

PAGE 13 of 20 4

VALUATION SUMMARY

VALUATION BY	DIRECT_CAP
Tax Group: 4	Tax Dist:
BUILDING MARKET VALUE	36,684,304
TOTAL MARKET OB/XF VALUE	0
TOTAL LAND VALUE - MARKET	0
TOTAL MARKET VALUE	39,874,243
SOH/AGL Deduction	0
ASSESSED VALUE	39,874,243
TOTAL EXEMPTION VALUE	0
BASE TAXABLE VALUE	39,874,243
TOTAL JUST VALUE	39,874,243
NCON VALUE	0
INCOME VALUE	39,874,243
PREVIOUS YEAR MKT VALUE	37,260,507

PERMIT NUM	DESCRIPTION	AMT	ISSUED
P12596	OTHER	0	08/01/2007
P12597	OTHER	0	08/01/2007
P12598	OTHER	0	08/01/2007
C20283	CO ISSUED	0	07/01/2007
C20293	CO ISSUED	0	07/01/2007
C20292	CO ISSUED	0	07/01/2007

SALES DATA

OFF RECORD Number	DATE	TYPE INST	Q / U	V / I	RSN CD	SALE PRICE
2407/1161	11/10/2020	SW	Q	I	01	37,320,000
GRANTOR: RAIA FL SPE GROUP IV						
GRANTEE: CF COURTNEY ISLES L						
2056/0003	6/28/2016	SW	U	I	11	100
GRANTOR: DUDLEY JOHNNY L, DANI						
GRANTEE: COURTNEY ISLES LLC						

BUILDING NOTES

BUILDING DIMENSIONS

BAS=[YR=2008] W97S22E97N22$.

EXTRA FEATURES

LN	OB/XF CODE	DESCRIPTION	BLD	CAP	L	W	UNITS	UT	Adj R	ADJ UNIT PRICE	ORIG COND	YEAR ON	YEAR ACTUAL	Q	% COND	OB/XF MKT VALUE	NOTES

LAND DESCRIPTION

TOTAL OB/XF 0

LN	USE CODE	CLS	LAND USE DESCRIPTION	CAP	RD	LOC ZONE	FRONT	DEPTH	TOT LND UTS	UNIT TYPE	DT	DPTH FACT	% COND	TOT ADJ	UNIT PRICE	ADJ UNIT PRICE	LAND VALUE	OTHER ADJUSTMENTS AND NOTES	YEAR	DENSITY	DECL	FRZ	YR	CONSRV

REVIEW DATE 04/11/2025 BY KW Total Acres: 0.00 Total Land Value: 3,189,939 Market: 0 Agricultural: 0 Common: 0 PRINTED 07/30/2025 BY SYS

PT JOHN LOWE MILL GRANTS
SEC 37-2N-27E & 51-3N-27E
IN OR 2407/1161(EX UTIL ESMT'S

CF COURTNEY ISLES LLC
C/O CF REAL EST SERVICES LLC, 710 PEACHTREE ST NE STE #100
ATLANTA, GA 30308

2025

37-2N-27-0000-0001-0260

NASSAU COUNTY PROPERTY

BUILDING CHARACTERISTICS

ELEMENT	CD	CONSTRUCTION
Exterior Wall	31	HARDIE BRD 100
Roof Structur	04	WOOD TRUSS 100
Roof Cover	03	COMP SHNGL 100
Interior Wall	05	DRYWALL 100
Interior Floo	03	CONC FINSH 100
Ceiling	02	F.NOT SUS 100
Air Condition	01	NONE 100
Heating Type	01	NONE 100
Fixtures		0 100
Frame	02	WOOD FRAME 100
Story Height		9 100
RMS		5 100
Stories	1.	1. 100
Units		0 100
Occupancy	00	NONE 100
Quality	03	Quality Level 03

DOR CODE	0300	MULTI-FAMILY	
MAP NUM		MKT AREA	04
NEIGHBORHOOD/LOC	4002.00		

AREA TYPE	TOTAL GROSS AREA	PCT OF BASE	YEAR	TOT ADJ AREA	SUBAREA MARKET VALUE
BAS	1,386	100	2008	1,386	33,513
TOTALS	1,386			1,386	33,513

MARKET ADJUSTMENTS

TYPE	MDL	EFF. AREA	TOT ADJ PTS	EFF. BASE RATE	REPL. COST NEW	AYB	EYB	ECON	FNCT		NORM	% COND
0304	04	1,386	81.0495	26.14	36,230	2008	2008	0	0	0	7.50	92.50

14 APART/GAR – 0% - 0 Heated Area: 1386 HX Base Yr

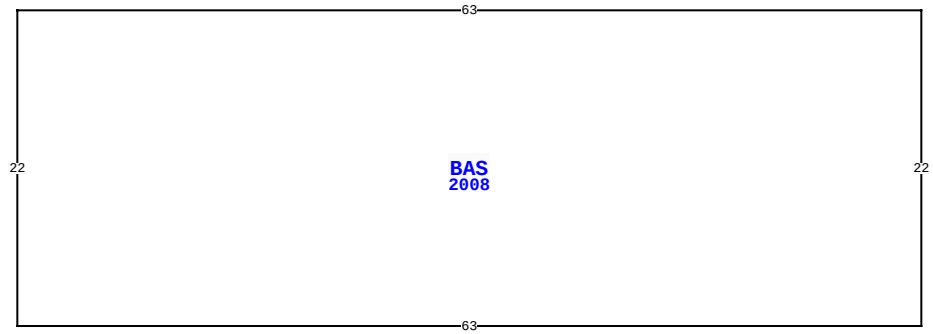

86195 COURTNEY ISLES WAY, YULEE

BLD DATE	04/11/2025	KW	LGL DATE	
XF DATE	04/11/2025	KW	LAND DATE	04/25/2025 DC
INC DATE			AG DATE	

VALUATION SUMMARY

VALUATION BY	DIRECT_CAP
Tax Group: 4	Tax Dist:
BUILDING MARKET VALUE	36,684,304
TOTAL MARKET OB/XF VALUE	0
TOTAL LAND VALUE - MARKET	0
TOTAL MARKET VALUE	39,874,243
SOH/AGL Deduction	0
ASSESSED VALUE	39,874,243
TOTAL EXEMPTION VALUE	0
BASE TAXABLE VALUE	39,874,243
TOTAL JUST VALUE	39,874,243
NCON VALUE	0
INCOME VALUE	39,874,243
PREVIOUS YEAR MKT VALUE	37,260,507

PERMIT NUM	DESCRIPTION	AMT	ISSUED
B20299	NEW CONSTR	0	07/01/2007
C20275	CO ISSUED	0	07/01/2007
C20299	CO ISSUED	0	07/01/2007
C20279	CO ISSUED	0	07/01/2007
C20298	CO ISSUED	0	07/01/2007
C20281	CO ISSUED	1,340,658	07/01/2007

SALES DATA

OFF RECORD Number	DATE	TYPE INST	Q / U	V / I	RSN CD	SALE PRICE
2407/1161	11/10/2020	SW	Q	I	01	37,320,000
GRANTOR: RAIA FL SPE GROUP IV						
GRANTEE: CF COURTNEY ISLES L						
2056/0003	6/28/2016	SW	U	I	11	100
GRANTOR: DUDLEY JOHNNY L, DANI						
GRANTEE: COURTNEY ISLES LLC						

BUILDING NOTES

BUILDING DIMENSIONS

BAS=[YR=2008] W63S22E63N22$.

EXTRA FEATURES

LN	OB/XF CODE	DESCRIPTION	BLD	CAP	L	W	UNITS	UT	Adj R	ADJ UNIT PRICE	ORIG COND	YEAR ON	YEAR ACTUAL	Q	% COND	OB/XF MKT VALUE	NOTES

LAND DESCRIPTION

TOTAL OB/XF 0

LN	USE CODE	CLS	LAND USE DESCRIPTION	CAP	RD	LOC ZONE	FRONT	DEPTH	TOT LND UTS	UNIT TYPE	DT	DPTH FACT	% COND	TOT ADJ	UNIT PRICE	ADJ UNIT PRICE	LAND VALUE	OTHER ADJUSTMENTS AND NOTES	YEAR	DENSITY	DECL	FRZ	YR	CONSRV

REVIEW DATE 04/11/2025 BY KW Total Acres: 0.00 Total Land Value: 3,189,939 Market: 0 Agricultural: 0 Common: 0 PRINTED 07/30/2025 BY SYS

PT JOHN LOWE MILL GRANTS
SEC 37-2N-27E & 51-3N-27E
IN OR 2407/1161(EX UTIL ESMT'S

CF COURTNEY ISLES LLC
C/O CF REAL EST SERVICES LLC, 710 PEACHTREE ST NE STE #100
ATLANTA, GA 30308

2025

37-2N-27-0000-0001-0260

NASSAU COUNTY PROPERTY

BUILDING CHARACTERISTICS

ELEMENT	CD	CONSTRUCTION
Exterior Wall	31	HARDIE BRD 100
Roof Structur	04	WOOD TRUSS 100
Roof Cover	03	COMP SHNGL 100
Interior Wall	05	DRYWALL 100
Interior Floo	03	CONC FINSH 100
Ceiling	02	F.NOT SUS 100
Air Condition	01	NONE 100
Heating Type	01	NONE 100
Fixtures		0 100
Frame	02	WOOD FRAME 100
Story Height		9 100
RMS		5 100
Stories	1.	1. 100
Units		0 100
Occupancy	00	NONE 100
Quality	03	Quality Level 03

DOR CODE	0300	MULTI-FAMILY	
MAP NUM		MKT AREA	04
NEIGHBORHOOD/LOC	4002.00		

AREA TYPE	TOTAL GROSS AREA	PCT OF BASE	YEAR	TOT ADJ AREA	SUBAREA MARKET VALUE
BAS	1,386	100	2008	1,386	33,513
TOTALS	1,386			1,386	33,513

MARKET ADJUSTMENTS

TYPE	MDL	EFF. AREA	TOT ADJ PTS	EFF. BASE RATE	REPL. COST NEW	AYB	EYB	ECON	FNCT		NORM	% COND
0304	04	1,386	81.0495	26.14	36,230	2008	2008	0	0	0	7.50	92.50

15 APART/GAR – 0% - 0 Heated Area: 1386 HX Base Yr

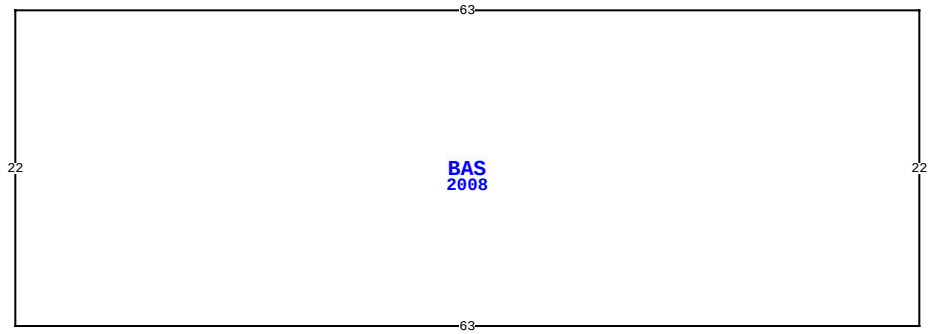

86195 COURTNEY ISLES WAY, YULEE

BLD DATE	04/11/2025	KW	LGL DATE	
XF DATE	04/11/2025	KW	LAND DATE	04/25/2025 DC
INC DATE			AG DATE	

VALUATION SUMMARY

VALUATION BY	DIRECT_CAP
Tax Group: 4	Tax Dist:
BUILDING MARKET VALUE	36,684,304
TOTAL MARKET OB/XF VALUE	0
TOTAL LAND VALUE - MARKET	0
TOTAL MARKET VALUE	39,874,243
SOH/AGL Deduction	0
ASSESSED VALUE	39,874,243
TOTAL EXEMPTION VALUE	0
BASE TAXABLE VALUE	39,874,243
TOTAL JUST VALUE	39,874,243
NCON VALUE	0
INCOME VALUE	39,874,243
PREVIOUS YEAR MKT VALUE	37,260,507

PERMIT NUM	DESCRIPTION	AMT	ISSUED
C20297	CO ISSUED	2,921,351	07/01/2007
C20273	CO ISSUED	0	07/01/2007
B20260	NEW CONSTR	185,592	07/01/2007
B20273	NEW CONSTR	407,966	07/01/2007
B20274	NEW CONSTR	412,909	07/01/2007
B20275	NEW CONSTR	1,695,251	07/01/2007

SALES DATA

OFF RECORD Number	DATE	TYPE INST	Q / U	V / I	RSN CD	SALE PRICE
2407/1161	11/10/2020	SW	Q	I	01	37,320,000
GRANTOR: RAIA FL SPE GROUP IV						
GRANTEE: CF COURTNEY ISLES L						
2056/0003	6/28/2016	SW	U	I	11	100
GRANTOR: DUDLEY JOHNNY L, DANI						
GRANTEE: COURTNEY ISLES LLC						

BUILDING NOTES

BUILDING DIMENSIONS

BAS=[YR=2008] W63S22E63N22$.

EXTRA FEATURES

LN	OB/XF CODE	DESCRIPTION	BLD	CAP	L	W	UNITS	UT	Adj R	ADJ UNIT PRICE	ORIG COND	YEAR ON	YEAR ACTUAL	Q	% COND	OB/XF MKT VALUE	NOTES

LAND DESCRIPTION

TOTAL OB/XF 0

LN	USE CODE	CLS	LAND USE DESCRIPTION	CAP	RD	LOC ZONE	FRONT	DEPTH	TOT LND UTS	UNIT TYPE	DT	DPTH FACT	% COND	TOT ADJ	UNIT PRICE	ADJ UNIT PRICE	LAND VALUE	OTHER ADJUSTMENTS AND NOTES	YEAR	DENSITY	DECL	FRZ	YR	CONSRV

REVIEW DATE 04/11/2025 BY KW Total Acres: 0.00 Total Land Value: 3,189,939 Market: 0 Agricultural: 0 Common: 0 PRINTED 07/30/2025 BY SYS

PT JOHN LOWE MILL GRANTS
SEC 37-2N-27E & 51-3N-27E
IN OR 2407/1161(EX UTIL ESMT'S

CF COURTNEY ISLES LLC
C/O CF REAL EST SERVICES LLC, 710 PEACHTREE ST NE STE #100
ATLANTA, GA 30308

2025

37-2N-27-0000-0001-0260

BUILDING CHARACTERISTICS

ELEMENT	CD	CONSTRUCTION
Exterior Wall	31	HARDIE BRD 100
Roof Structur	04	WOOD TRUSS 100
Roof Cover	03	COMP SHNGL 100
Interior Wall	05	DRYWALL 100
Interior Floo	03	CONC FINSH 100
Ceiling	02	F.NOT SUS 100
Air Condition	01	NONE 100
Heating Type	01	NONE 100
Fixtures		0 100
Frame	02	WOOD FRAME 100
Story Height		9 100
RMS		8 100
Stories	1.	1. 100
Units		0 100
Occupancy	00	NONE 100
Quality	03	Quality Level 03

DOR CODE	0300	MULTI-FAMILY	
MAP NUM		MKT AREA	04
NEIGHBORHOOD/LOC	4002.00		

AREA TYPE	TOTAL GROSS AREA	PCT OF BASE	YEAR	TOT ADJ AREA	SUBAREA MARKET VALUE
BAS	2,134	100	2008	2,134	51,599
TOTALS	2,134			2,134	51,599

MARKET ADJUSTMENTS

TYPE	MDL	EFF. AREA	TOT ADJ PTS	EFF. BASE RATE	REPL. COST NEW	AYB	EYB	ECON	FNCT		NORM	% COND
0304	04	2,134	81.0495	26.14	55,783	2008	2008	0	0	0	7.50	92.50

16 APART/GAR – 0% - 0 Heated Area: 2134 HX Base Yr

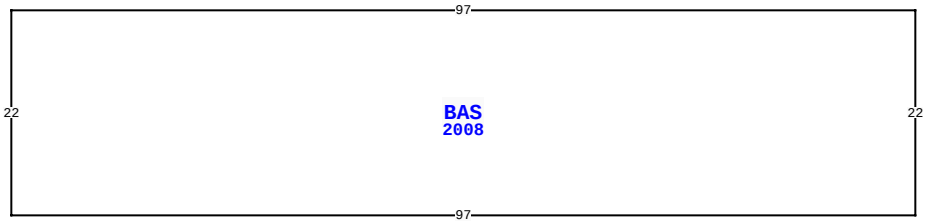

86195 COURTNEY ISLES WAY, YULEE

BLD DATE	04/11/2025	KW	LGL DATE	
XF DATE	04/11/2025	KW	LAND DATE	04/25/2025 DC
INC DATE			AG DATE	

NASSAU COUNTY PROPERTY

PAGE 16 of 20 4

VALUATION SUMMARY

VALUATION BY	DIRECT_CAP
Tax Group: 4	Tax Dist:
BUILDING MARKET VALUE	36,684,304
TOTAL MARKET OB/XF VALUE	0
TOTAL LAND VALUE - MARKET	0
TOTAL MARKET VALUE	39,874,243
SOH/AGL Deduction	0
ASSESSED VALUE	39,874,243
TOTAL EXEMPTION VALUE	0
BASE TAXABLE VALUE	39,874,243
TOTAL JUST VALUE	39,874,243
NCON VALUE	0
INCOME VALUE	39,874,243
PREVIOUS YEAR MKT VALUE	37,260,507

PERMIT NUM	DESCRIPTION	AMT	ISSUED
B20276	NEW CONSTR	53,724	07/01/2007
B20277	NEW CONSTR	1,340,658	07/01/2007
B20278	NEW CONSTR	5,000	07/01/2007
B20279	NEW CONSTR	1,340,658	07/01/2007
B20281	NEW CONSTR	1,340,658	07/01/2007
B20282	NEW CONSTR	12,000	07/01/2007

SALES DATA

OFF RECORD Number	DATE	TYPE INST	Q / U	V / I	RSN CD	SALE PRICE
2407/1161	11/10/2020	SW	Q	I	01	37,320,000
GRANTOR: RAIA FL SPE GROUP IV						
GRANTEE: CF COURTNEY ISLES L						
2056/0003	6/28/2016	SW	U	I	11	100
GRANTOR: DUDLEY JOHNNY L, DANI						
GRANTEE: COURTNEY ISLES LLC						

BUILDING NOTES

BUILDING DIMENSIONS

BAS=[YR=2008] W97S22E97N22$.

EXTRA FEATURES

LN	OB/XF CODE	DESCRIPTION	BLD	CAP	L	W	UNITS	UT	Adj R	ADJ UNIT PRICE	ORIG COND	YEAR ON	YEAR ACTUAL	Q	% COND	OB/XF MKT VALUE	NOTES

LAND DESCRIPTION

TOTAL OB/XF 0

LN	USE CODE	CLS	LAND USE DESCRIPTION	CAP	RD	LOC ZONE	FRONT	DEPTH	TOT LND UTS	UNIT TYPE	DT	DPTH FACT	% COND	TOT ADJ	UNIT PRICE	ADJ UNIT PRICE	LAND VALUE	OTHER ADJUSTMENTS AND NOTES	YEAR	DENSITY	DECL	FRZ	YR	CONSRV

REVIEW DATE 04/11/2025 BY KW Total Acres: 0.00 Total Land Value: 3,189,939 Market: 0 Agricultural: 0 Common: 0 PRINTED 07/30/2025 BY SYS

PT JOHN LOWE MILL GRANTS
SEC 37-2N-27E & 51-3N-27E
IN OR 2407/1161(EX UTIL ESMT'S

CF COURTNEY ISLES LLC
C/O CF REAL EST SERVICES LLC, 710 PEACHTREE ST NE STE #100
ATLANTA, GA 30308

2025

37-2N-27-0000-0001-0260

BUILDING CHARACTERISTICS

ELEMENT	CD	CONSTRUCTION
Exterior Wall	31	HARDIE BRD 100
Roof Structur	04	WOOD TRUSS 100
Roof Cover	03	COMP SHNGL 100
Interior Wall	05	DRYWALL 100
Interior Floo	03	CONC FINSH 100
Ceiling	02	F.NOT SUS 100
Air Condition	01	NONE 100
Heating Type	01	NONE 100
Fixtures		0 100
Frame	02	WOOD FRAME 100
Story Height		9 100
RMS		8 100
Stories	1.	1. 100
Units		0 100
Occupancy	00	NONE 100
Quality	03	Quality Level 03

DOR CODE	0300	MULTI-FAMILY	
MAP NUM		MKT AREA	04
NEIGHBORHOOD/LOC	4002.00		

AREA TYPE	TOTAL GROSS AREA	PCT OF BASE	YEAR	TOT ADJ AREA	SUBAREA MARKET VALUE
BAS	2,134	100	2008	2,134	51,599
TOTALS	2,134			2,134	51,599

MARKET ADJUSTMENTS

TYPE	MDL	EFF. AREA	TOT ADJ PTS	EFF. BASE RATE	REPL. COST NEW	AYB	EYB	ECON	FNCT		NORM	% COND
0304	04	2,134	81.0495	26.14	55,783	2008	2008	0	0	0	7.50	92.50

17 APART/GAR – 0% - 0 Heated Area: 2134 HX Base Yr

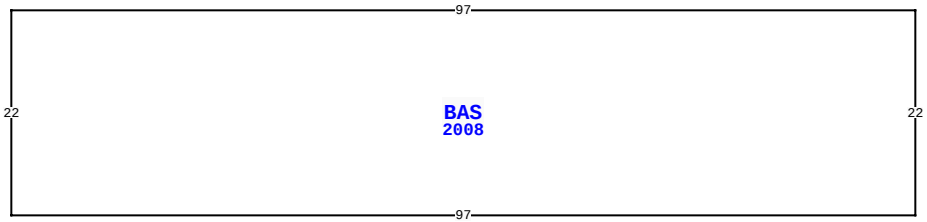

86195 COURTNEY ISLES WAY, YULEE

BLD DATE	04/11/2025	KW	LGL DATE	
XF DATE	04/11/2025	KW	LAND DATE	04/25/2025 DC
INC DATE			AG DATE	

NASSAU COUNTY PROPERTY

PAGE 17 of 20 4

VALUATION SUMMARY

VALUATION BY	DIRECT_CAP
Tax Group: 4	Tax Dist:
BUILDING MARKET VALUE	36,684,304
TOTAL MARKET OB/XF VALUE	0
TOTAL LAND VALUE - MARKET	0
TOTAL MARKET VALUE	39,874,243
SOH/AGL Deduction	0
ASSESSED VALUE	39,874,243
TOTAL EXEMPTION VALUE	0
BASE TAXABLE VALUE	39,874,243
TOTAL JUST VALUE	39,874,243
NCON VALUE	0
INCOME VALUE	39,874,243
PREVIOUS YEAR MKT VALUE	37,260,507

PERMIT NUM	DESCRIPTION	AMT	ISSUED
B20283	NEW CONSTR	1,340,658	07/01/2007
B20284	NEW CONSTR	2,000	07/01/2007
B20285	NEW CONSTR	69,696	07/01/2007
B20286	NEW CONSTR	69,696	07/01/2007
B20287	NEW CONSTR	69,696	07/01/2007
B20288	NEW CONSTR	45,738	07/01/2007

SALES DATA

OFF RECORD Number	DATE	TYPE INST	Q / U	V / I	RSN CD	SALE PRICE
2407/1161	11/10/2020	SW	Q	I	01	37,320,000
GRANTOR: RAIA FL SPE GROUP IV						
GRANTEE: CF COURTNEY ISLES L						
2056/0003	6/28/2016	SW	U	I	11	100
GRANTOR: DUDLEY JOHNNY L, DANI						
GRANTEE: COURTNEY ISLES LLC						

BUILDING NOTES

BUILDING DIMENSIONS

BAS=[YR=2008] W97S22E97N22$.

EXTRA FEATURES

LN	OB/XF CODE	DESCRIPTION	BLD	CAP	L	W	UNITS	UT	Adj R	ADJ UNIT PRICE	ORIG COND	YEAR ON	YEAR ACTUAL	Q	% COND	OB/XF MKT VALUE	NOTES

LAND DESCRIPTION

TOTAL OB/XF 0

LN	USE CODE	CLS	LAND USE DESCRIPTION	CAP	RD	LOC ZONE	FRONT	DEPTH	TOT LND UTS	UNIT TYPE	DT	DPTH FACT	% COND	TOT ADJ	UNIT PRICE	ADJ UNIT PRICE	LAND VALUE	OTHER ADJUSTMENTS AND NOTES	YEAR	DENSITY	DECL	FRZ	YR	CONSRV

REVIEW DATE 04/11/2025 BY KW Total Acres: 0.00 Total Land Value: 3,189,939 Market: 0 Agricultural: 0 Common: 0 PRINTED 07/30/2025 BY SYS

PT JOHN LOWE MILL GRANTS
SEC 37-2N-27E & 51-3N-27E
IN OR 2407/1161(EX UTIL ESMT'S

CF COURTNEY ISLES LLC
C/O CF REAL EST SERVICES LLC, 710 PEACHTREE ST NE STE #100
ATLANTA, GA 30308

2025

37-2N-27-0000-0001-0260

BUILDING CHARACTERISTICS

ELEMENT	CD	CONSTRUCTION
Exterior Wall	31	HARDIE BRD 100
Roof Structur	04	WOOD TRUSS 100
Roof Cover	03	COMP SHNGL 100
Interior Wall	05	DRYWALL 100
Interior Floo	03	CONC FINSH 100
Ceiling	02	F.NOT SUS 100
Air Condition	01	NONE 100
Heating Type	01	NONE 100
Fixtures		0 100
Frame	02	WOOD FRAME 100
Story Height		9 100
RMS		8 100
Stories	1.	1. 100
Units		0 100
Occupancy	00	NONE 100
Quality	03	Quality Level 03

DOR CODE	0300	MULTI-FAMILY	
MAP NUM		MKT AREA	04
NEIGHBORHOOD/LOC	4002.00		

AREA TYPE	TOTAL GROSS AREA	PCT OF BASE	YEAR	TOT ADJ AREA	SUBAREA MARKET VALUE
BAS	2,134	100	2008	2,134	51,599
TOTALS	2,134			2,134	51,599

MARKET ADJUSTMENTS

TYPE	MDL	EFF. AREA	TOT ADJ PTS	EFF. BASE RATE	REPL. COST NEW	AYB	EYB	ECON	FNCT		NORM	% COND
0304	04	2,134	81.0495	26.14	55,783	2008	2008	0	0	0	7.50	92.50

18 APART/GAR – 0% - 0 Heated Area: 2134 HX Base Yr

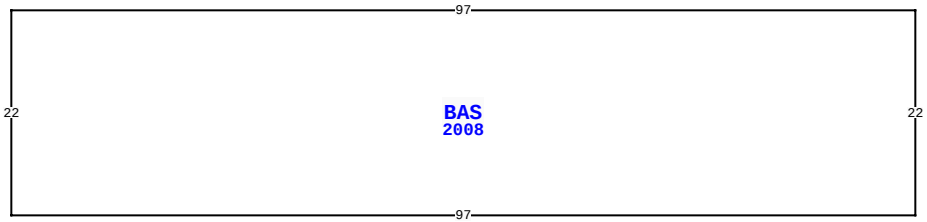

86195 COURTNEY ISLES WAY, YULEE

BLD DATE	04/11/2025	KW	LGL DATE	
XF DATE	04/11/2025	KW	LAND DATE	04/25/2025 DC
INC DATE			AG DATE	

NASSAU COUNTY PROPERTY

PAGE 18 of 20 4

VALUATION SUMMARY

VALUATION BY	DIRECT_CAP
Tax Group: 4	Tax Dist:
BUILDING MARKET VALUE	36,684,304
TOTAL MARKET OB/XF VALUE	0
TOTAL LAND VALUE - MARKET	0
TOTAL MARKET VALUE	39,874,243
SOH/AGL Deduction	0
ASSESSED VALUE	39,874,243
TOTAL EXEMPTION VALUE	0
BASE TAXABLE VALUE	39,874,243
TOTAL JUST VALUE	39,874,243
NCON VALUE	0
INCOME VALUE	39,874,243
PREVIOUS YEAR MKT VALUE	37,260,507

PERMIT NUM	DESCRIPTION	AMT	ISSUED
B20289	NEW CONSTR	45,738	07/01/2007
B20290	NEW CONSTR	69,696	07/01/2007
B20291	NEW CONSTR	139,392	07/01/2007
B20292	NEW CONSTR	13,200	07/01/2007
B20293	NEW CONSTR	1,370,975	07/01/2007
B20294	NEW CONSTR	5,000	07/01/2007

SALES DATA

OFF RECORD Number	DATE	TYPE INST	Q / U	V / I	RSN CD	SALE PRICE
2407/1161	11/10/2020	SW	Q	I	01	37,320,000
GRANTOR: RAIA FL SPE GROUP IV						
GRANTEE: CF COURTNEY ISLES L						
2056/0003	6/28/2016	SW	U	I	11	100
GRANTOR: DUDLEY JOHNNY L, DANI						
GRANTEE: COURTNEY ISLES LLC						

BUILDING NOTES

BUILDING DIMENSIONS

BAS=[YR=2008] W97S22E97N22$.

EXTRA FEATURES

LN	OB/XF CODE	DESCRIPTION	BLD	CAP	L	W	UNITS	UT	Adj R	ADJ UNIT PRICE	ORIG COND	YEAR ON	YEAR ACTUAL	Q	% COND	OB/XF MKT VALUE	NOTES

LAND DESCRIPTION

TOTAL OB/XF 0

LN	USE CODE	CLS	LAND USE DESCRIPTION	CAP	RD	LOC ZONE	FRONT	DEPTH	TOT LND UTS	UNIT TYPE	DT	DPTH FACT	% COND	TOT ADJ	UNIT PRICE	ADJ UNIT PRICE	LAND VALUE	OTHER ADJUSTMENTS AND NOTES	YEAR	DENSITY	DECL	FRZ	YR	CONSRV

REVIEW DATE 04/11/2025 BY KW Total Acres: 0.00 Total Land Value: 3,189,939 Market: 0 Agricultural: 0 Common: 0 PRINTED 07/30/2025 BY SYS

PT JOHN LOWE MILL GRANTS
SEC 37-2N-27E & 51-3N-27E
IN OR 2407/1161(EX UTIL ESMT'S

CF COURTNEY ISLES LLC
C/O CF REAL EST SERVICES LLC, 710 PEACHTREE ST NE STE #100
ATLANTA, GA 30308

2025

37-2N-27-0000-0001-0260

NASSAU COUNTY PROPERTY

BUILDING CHARACTERISTICS

ELEMENT	CD	CONSTRUCTION
Exterior Wall	31	HARDIE BRD 100
Roof Structur	04	WOOD TRUSS 100
Roof Cover	03	COMP SHNGL 100
Interior Wall	05	DRYWALL 100
Interior Floo	03	CONC FINSH 100
Ceiling	02	F.NOT SUS 100
Air Condition	01	NONE 100
Heating Type	01	NONE 100
Fixtures		0 100
Frame	02	WOOD FRAME 100
Story Height		9 100
RMS		6 100
Stories	1.	1. 100
Units		0 100
Occupancy	00	NONE 100
Quality	03	Quality Level 03

DOR CODE	0300	MULTI-FAMILY	
MAP NUM		MKT AREA	04
NEIGHBORHOOD/LOC	4002.00		

AREA TYPE	TOTAL GROSS AREA	PCT OF BASE	YEAR	TOT ADJ AREA	SUBAREA MARKET VALUE
BAS	1,650	100	2008	1,650	39,896
TOTALS	1,650			1,650	39,896

MARKET ADJUSTMENTS

TYPE	MDL	EFF. AREA	TOT ADJ PTS	EFF. BASE RATE	REPL. COST NEW	AYB	EYB	ECON	FNCT		NORM	% COND
0304	04	1,650	81.0495	26.14	43,131	2008	2008	0	0	0	7.50	92.50

19 APART/GAR – 0% - 0 Heated Area: 1650 HX Base Yr

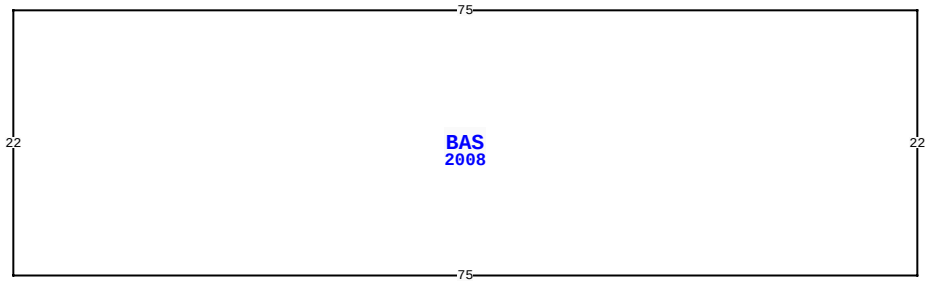

86195 COURTNEY ISLES WAY, YULEE

BLD DATE	04/11/2025	KW	LGL DATE	
XF DATE	04/11/2025	KW	LAND DATE	04/25/2025 DC
INC DATE			AG DATE	

NASSAU COUNTY PROPERTY — VALUATION SUMMARY

VALUATION BY	DIRECT_CAP
Tax Group: 4	Tax Dist:
BUILDING MARKET VALUE	36,684,304
TOTAL MARKET OB/XF VALUE	0
TOTAL LAND VALUE - MARKET	0
TOTAL MARKET VALUE	39,874,243
SOH/AGL Deduction	0
ASSESSED VALUE	39,874,243
TOTAL EXEMPTION VALUE	0
BASE TAXABLE VALUE	39,874,243
TOTAL JUST VALUE	39,874,243
NCON VALUE	0
INCOME VALUE	39,874,243
PREVIOUS YEAR MKT VALUE	37,260,507

PERMIT NUM	DESCRIPTION	AMT	ISSUED
B20295	NEW CONSTR	5,000	07/01/2007
B20296	NEW CONSTR	5,000	07/01/2007
B20297	NEW CONSTR	2,921,351	07/01/2007
B20298	NEW CONSTR	2,921,351	07/01/2007
E19321	ELEC OTHER	0	05/01/2007

SALES DATA

OFF RECORD Number	DATE	TYPE INST	Q / U	V / I	RSN CD	SALE PRICE
2407/1161	11/10/2020	SW	Q	I	01	37,320,000
GRANTOR: RAIA FL SPE GROUP IV						
GRANTEE: CF COURTNEY ISLES L						
2056/0003	6/28/2016	SW	U	I	11	100
GRANTOR: DUDLEY JOHNNY L, DANI						
GRANTEE: COURTNEY ISLES LLC						

BUILDING NOTES

BUILDING DIMENSIONS

BAS=[YR=2008] W75S22E75N22$.

EXTRA FEATURES

LN	OB/XF CODE	DESCRIPTION	BLD	CAP	L	W	UNITS	UT	Adj R	ADJ UNIT PRICE	ORIG COND	YEAR ON	YEAR ACTUAL	Q	% COND	OB/XF MKT VALUE	NOTES

LAND DESCRIPTION

TOTAL OB/XF 0

LN	USE CODE	CLS	LAND USE DESCRIPTION	CAP	RD	LOC ZONE	FRONT	DEPTH	TOT LND UTS	UNIT TYPE	DT	DPTH FACT	% COND	TOT ADJ	UNIT PRICE	ADJ UNIT PRICE	LAND VALUE	OTHER ADJUSTMENTS AND NOTES	YEAR	DENSITY	DECL	FRZ	YR	CONSRV

REVIEW DATE 04/11/2025 BY KW Total Acres: 0.00 Total Land Value: 3,189,939 Market: 0 Agricultural: 0 Common: 0 PRINTED 07/30/2025 BY SYS

PT JOHN LOWE MILL GRANTS
SEC 37-2N-27E & 51-3N-27E
IN OR 2407/1161(EX UTIL ESMT'S

CF COURTNEY ISLES LLC
C/O CF REAL EST SERVICES LLC, 710 PEACHTREE ST NE STE #100
ATLANTA, GA 30308

2025

37-2N-27-0000-0001-0260

BUILDING CHARACTERISTICS

ELEMENT	CD	CONSTRUCTION
Exterior Wall	31	HARDIE BRD 100
Roof Structur	04	WOOD TRUSS 100
Roof Cover	03	COMP SHNGL 100
Interior Wall	05	DRYWALL 100
Interior Floo	03	CONC FINSH 100
Ceiling	02	F.NOT SUS 100
Air Condition	01	NONE 100
Heating Type	01	NONE 100
Fixtures		1 100
Frame	02	WOOD FRAME 100
Story Height		9 100
RMS		1 100
Stories	1.	1. 100
Units		0 100
Occupancy	00	NONE 100
Quality	03	Quality Level 03

DOR CODE	0300	MULTI-FAMILY	
MAP NUM		MKT AREA	04
NEIGHBORHOOD/LOC	4002.00		

AREA TYPE	TOTAL GROSS AREA	PCT OF BASE	YEAR	TOT ADJ AREA	SUBAREA MARKET VALUE
BAS	400	100	2008	400	10,371
TOTALS	400			400	10,371

MARKET ADJUSTMENTS

TYPE	MDL	EFF. AREA	TOT ADJ PTS	EFF. BASE RATE	REPL. COST NEW	AYB	EYB	ECON	FNCT		NORM	% COND
0304	04	400	86.9085	28.03	11,212	2008	2008	0	0	0	7.50	92.50

20 APART/GAR – 0% - 0 Heated Area: 400 HX Base Yr

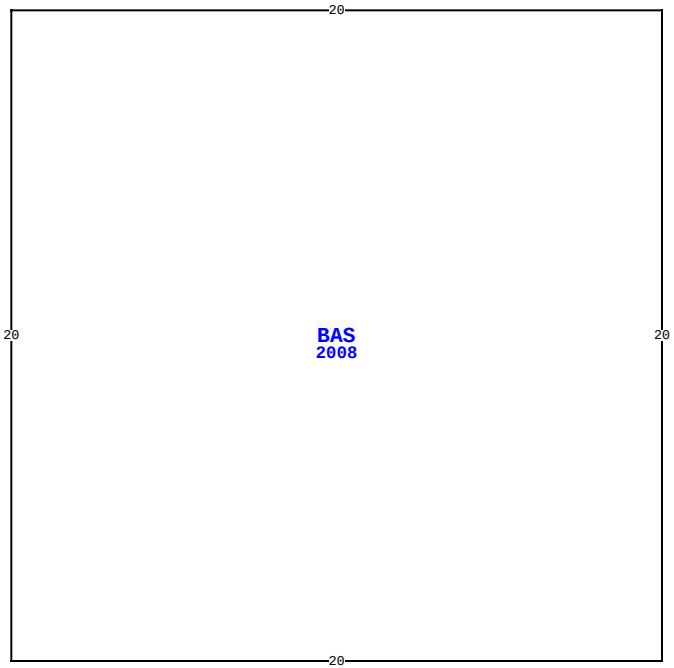

86195 COURTNEY ISLES WAY, YULEE

BLD DATE	04/11/2025	KW	LGL DATE	
XF DATE	04/11/2025	KW	LAND DATE	04/25/2025 DC
INC DATE			AG DATE	

NASSAU COUNTY PROPERTY

VALUATION SUMMARY

VALUATION BY	DIRECT_CAP
Tax Group: 4	Tax Dist:
BUILDING MARKET VALUE	36,684,304
TOTAL MARKET OB/XF VALUE	0
TOTAL LAND VALUE - MARKET	0
TOTAL MARKET VALUE	39,874,243
SOH/AGL Deduction	0
ASSESSED VALUE	39,874,243
TOTAL EXEMPTION VALUE	0
BASE TAXABLE VALUE	39,874,243
TOTAL JUST VALUE	39,874,243
NCON VALUE	0
INCOME VALUE	39,874,243
PREVIOUS YEAR MKT VALUE	37,260,507

PERMIT NUM	DESCRIPTION	AMT	ISSUED

SALES DATA

OFF RECORD Number	DATE	TYPE INST	Q U	V I	RSN CD	SALE PRICE
2407/1161	11/10/2020	SW	Q	I	01	37,320,000
GRANTOR: RAIA FL SPE GROUP IV						
GRANTEE: CF COURTNEY ISLES L						
2056/0003	6/28/2016	SW	U	I	11	100
GRANTOR: DUDLEY JOHNNY L, DANI						
GRANTEE: COURTNEY ISLES LLC						

BUILDING NOTES

BUILDING DIMENSIONS

BAS=[YR=2008] W20S20E20N20$.

EXTRA FEATURES

L N	OB/XF CODE	DESCRIPTION	BLD	CAP	L	W	UNITS	UT	Adj R	ADJ UNIT PRICE	ORIG COND	YEAR ON	YEAR ACTUAL	Q	% COND	OB/XF MKT VALUE	NOTES

LAND DESCRIPTION

TOTAL OB/XF 0

L N	USE CODE	CLS	LAND USE DESCRIPTION	CAP	R D	LOC ZONE	FRONT	DEPTH	TOT LND UTS	UNIT TYPE	D T	DPTH FACT	% COND	TOT ADJ	UNIT PRICE	ADJ UNIT PRICE	LAND VALUE	OTHER ADJUSTMENTS AND NOTES	YEAR	DENSITY	DECL	FRZ	YR	CONSRV

REVIEW DATE 04/11/2025 BY KW Total Acres: 0.00 Total Land Value: 3,189,939 Market: 0 Agricultural: 0 Common: 0 PRINTED 07/30/2025 BY SYS