PT JOHN LOW GRANT
SEC 37-2N-27E & PT JOHN D
VAUGHAN GRANT SEC 38-2N-27E IN

BW AMELIA LLC
C/O BEACHWOLD PARTNERS LP, 257 PARK AVENUE SOUTH
NEW YORK, NY 10010

2025

37-2N-27-0000-0001-0110

NASSAU COUNTY PROPERTY

BUILDING CHARACTERISTICS

ELEMENT	CD	CONSTRUCTION
Exterior Wall	31	HARDIE BRD 100
Roof Structur	04	WOOD TRUSS 100
Roof Cover	03	COMP SHNGL 100
Interior Wall	05	DRYWALL 100
Interior Floo	14	CARPET 80
Interior Floo	07	CORK/VTILE 20
Air Condition	03	CENTRAL 100
Heating Type	04	AIR DUCTED 100
Bedrooms		1 100
Bathrooms		1 100
Frame	02	WOOD FRAME 100
Story Height		10 100
RMS		0 100
Units		24 100
Quality	05	Quality Level 05

DOR CODE	0300	MULTI-FAMILY	
MAP NUM		MKT AREA	04
NEIGHBORHOOD/LOC	4005.00		

AREA TYPE	TOTAL GROSS AREA	PCT OF BASE	YEAR	TOT ADJ AREA	SUBAREA MARKET VALUE
BAS	1,628	100	2015	1,628	313,780
BAS	1,628	100	2015	1,628	313,780
BAS	2,400	100	2015	2,400	462,574
BAS	2,400	100	2015	2,400	462,574
CAN	55	30	2015	16	3,084
CAN	55	30	2015	16	3,084
CAN	65	30	2015	20	3,854
CAN	65	30	2015	20	3,854
CAN	400	30	2015	120	23,128
CAN	400	30	2015	120	23,128
TOTALS	30,204			27,482	5,296,859

MARKET ADJUSTMENTS

TYPE	MDL	EFF. AREA	TOT ADJ PTS	EFF. BASE RATE	REPL. COST NEW	AYB	EYB	ECON	FNCT		NORM	% COND
0302	03	27,482	116.0520	200.77	5,517,561	2015	2015	0	0	0	4.00	96.00

1 APART/LUX – 0% - 0 Heated Area: 25860 HX Base Yr

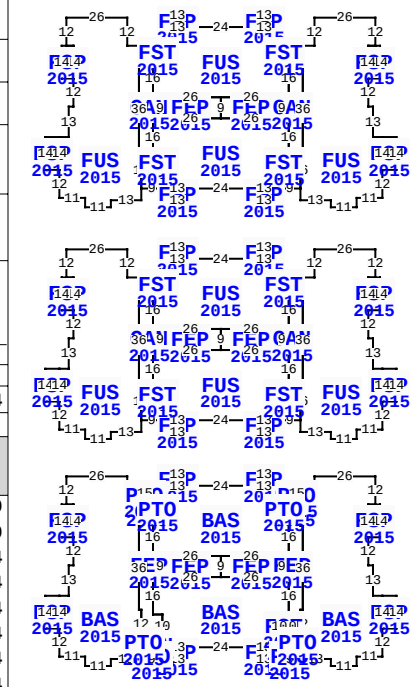

** This building has 69 Sub-Areas

86016 CHRISTIAN WAY, YULEE

BLD DATE	04/15/2025	KW	LGL DATE		
XF DATE	04/15/2025	KW	LAND DATE	04/28/2025	DC
INC DATE	04/15/2025	REA	AG DATE		

NASSAU COUNTY PROPERTY — VALUATION SUMMARY

VALUATION BY	DIRECT_CAP
Tax Group: 4	Tax Dist:
BUILDING MARKET VALUE	48,881,070
TOTAL MARKET OB/XF VALUE	0
TOTAL LAND VALUE - MARKET	0
TOTAL MARKET VALUE	51,453,758
SOH/AGL Deduction	0
ASSESSED VALUE	51,453,758
TOTAL EXEMPTION VALUE	0
BASE TAXABLE VALUE	51,453,758
TOTAL JUST VALUE	51,453,758
NCON VALUE	0
INCOME VALUE	51,453,758
PREVIOUS YEAR MKT VALUE	51,431,000

BEACH HOUSE AT AMELIA - APARTMENT COMPLEX

PERMIT NUM	DESCRIPTION	AMT	ISSUED
B1529766	BLDG 12 TYPE 1	2,611,333	04/04/2016
B1529767	BLDG 13 TYPE 1	2,611,333	04/04/2016
B1529762	BLDG 8 TYPE 2	2,797,975	03/30/2016
B1529772	BLDG 19 GARAGE 5B	221,364	03/29/2016
B1529765	BLDG 11 TYPE 1	2,611,333	03/21/2016
B1529770	BLDG 17 GARAGE 5D	161,004	03/04/2016

SALES DATA

OFF RECORD Number	DATE	TYPE INST	Q / U	V / I	RSN CD	SALE PRICE
2204/0589	6/19/2018	SW	Q	I	01	51,300,000
GRANTOR: THE RESERVE AMELIA LL						
GRANTEE: BW AMELIA LLC						
1964/1815	2/23/2015	MS	U	I	11	0
GRANTOR: LFW RESERVE LLC						
GRANTEE: THE RESERVE AMELIA						

BUILDING NOTES

BUILDING DIMENSIONS

BAS=[YR=2015;ORIG=-10,100] E26 S7 S2 S3 E6 S4 S5 W1 S36 E1 S12 S4 S3 S2 W13 S3 W11 N4 W11 N12 N14 E4 N13 E2 N12 N14 W3 N12 $
BAS=[YR=2015;ORIG=122,100] W26 S7 S2 S3 W6 S4 S5 E1 S36 W1 S12 S4 S3 S2 E13 S3 E11 N4 E11 N12 N14 W4 N13 W2 N12 N14 E3 N12 $
FUS=[YR=2015;LABEL=2ND FLR;ORIG=-10,3] E26 S12 E6 S9 W1 S36 E1 S16 S5 W13 S3 W11 N4 W11 N12 N14 E4 N13 E2 N12 N14 W3 N12 $
FUS=[YR=2015;LABEL=2ND FLR;ORIG=122,3] W26 S12 W6 S9 E1 S36 W1 S16 S5 E13 S3 E11 N4 E11 N12 N14 W4 N13 W2 N12 N14 E3 N12 $

EXTRA FEATURES

LN	OB/XF CODE	DESCRIPTION	BLD	CAP	L	W	UNITS	UT	Adj R	ADJ UNIT PRICE	ORIG COND	YEAR ON	YEAR ACTUAL	Q	% COND	OB/XF MKT VALUE	NOTES
1	0861	POOL GUNIT	0	0	0	0	1,893.00	SF	85.00	85.00	100	2015	2015	3	75	120,679	
2	0855	CONC PAVER	0	0	0	0	8,193.00	SF	10.00	10.00	100	2015	2015	3	95	77,834	
3	0462	ST/AL FNC	0	0	0	0	1,800.00	SF	10.00	10.00	100	2015	2015	3	75	13,500	
4	0810	CONCRETE A	0	0	0	0	360.00	SF	6.50	6.50	100	2015	2015	3	95	2,223	
6	0504	FP-ELECTRI	0	0	0	0	1.00	UT	2,000.00	2,000.00	100	2015	2015	3	96	1,920	
7	0966	FIRE SPRNK	14	0	0	0	5,058.00	SF	3.00	3.00	100	2015	2015	3	95	14,415	
8	0803	ASPHALT C	0	0	0	0	13,044.00	SF	2.00	2.00	100	2015	2015	3	74	19,305	
9	0812	CONCRETE C	0	0	0	0	3,661.00	SF	4.00	4.00	100	2015	2015	3	95	13,912	
10	0400	CONC CURB	0	0	0	0	825.00	LF	15.00	15.00	100	2015	2015	3	96	11,880	
11	0092	AUTO GATE	0	0	0	0	2.00	UT	3,500.00	3,500.00	100	2015	2015	3	65	4,550	

TOTAL OB/XF 280,218

LAND DESCRIPTION

LN	USE CODE	CLS	LAND USE DESCRIPTION	CAP	RD	LOC ZONE	FRONT	DEPTH	TOT LND UTS	UNIT TYPE	DT	DPTH FACT	% COND	TOT ADJ	UNIT PRICE	ADJ UNIT PRICE	LAND VALUE	OTHER ADJUSTMENTS AND NOTES	YEAR	DENSITY	DECL	FRZ	YR	CONSRV
1	000300	C	MULTI-FAMILY	0		RG-2	0.00	0.00	300.00	UT		1.00	1.00	1.00	16,000.00	16,000.00	2,934,377							

REVIEW DATE 04/15/2025 BY KW Total Acres: 0.00 Total Land Value: 2,572,688 Market: 0 Agricultural: 0 Common: 0 PRINTED 07/30/2025 BY SYS

PT JOHN LOW GRANT
SEC 37-2N-27E & PT JOHN D
VAUGHAN GRANT SEC 38-2N-27E IN

BW AMELIA LLC
C/O BEACHWOLD PARTNERS LP, 257 PARK AVENUE SOUTH
NEW YORK, NY 10010

2025

37-2N-27-0000-0001-0110

NASSAU COUNTY PROPERTY

BUILDING CHARACTERISTICS

ELEMENT	CD	CONSTRUCTION
Exterior Wall	31	HARDIE BRD 100
Roof Structur	04	WOOD TRUSS 100
Roof Cover	03	COMP SHNGL 100
Interior Wall	05	DRYWALL 100
Interior Floo	14	CARPET 80
Interior Floo	07	CORK/VTILE 20
Air Condition	03	CENTRAL 100
Heating Type	04	AIR DUCTED 100
Bedrooms		2 100
Bathrooms		2 100
Frame	02	WOOD FRAME 100
Story Height		10 100
RMS		0 100
Units		24 100
Quality	05	Quality Level 05
DOR CODE	0300	MULTI-FAMILY
MAP NUM		MKT AREA 04
NEIGHBORHOOD/LOC	4005.00	

AREA TYPE	TOTAL GROSS AREA	PCT OF BASE	YEAR	TOT ADJ AREA	SUBAREA MARKET VALUE
BAS	2,126	100	2015	2,126	421,846
BAS	2,126	100	2015	2,126	421,846
BAS	4,107	100	2015	4,107	814,921
CAN	24	30	2015	7	1,389
CAN	24	30	2015	7	1,389
CAN	24	30	2015	7	1,389
CAN	24	30	2015	7	1,389
CAN	486	30	2015	146	28,970
CAN	486	30	2015	146	28,970
CAN	486	30	2015	146	28,970
TOTALS	31,619			28,589	5,672,698

MARKET ADJUSTMENTS

TYPE	MDL	EFF. AREA	TOT ADJ PTS	EFF. BASE RATE	REPL. COST NEW	AYB	EYB	ECON	FNCT		NORM	% COND
0302	03	28,589	119.4720	206.69	5,909,060	2015	2015	0	0	0	4.00	96.00

2 APART/LUX – 0% - 0 Heated Area: 26978 HX Base Yr

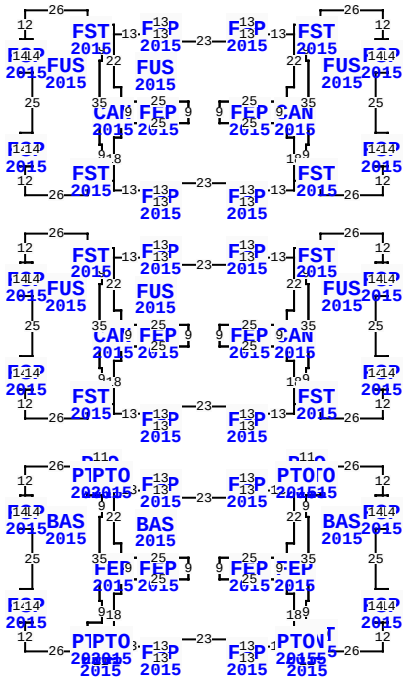

** This building has 69 Sub-Areas

86016 CHRISTIAN WAY, YULEE

BLD DATE	04/15/2025	KW	LGL DATE	
XF DATE	04/15/2025	KW	LAND DATE	04/28/2025 DC
INC DATE	04/15/2025	REA	AG DATE	

EXTRA FEATURES

LN	OB/XF CODE	DESCRIPTION	BLD	CAP	L	W	UNITS	UT	Adj R	ADJ UNIT PRICE	ORIG COND	YEAR ON	YEAR ACTUAL	Q	% COND	OB/XF MKT VALUE	NOTES
12	0855	CONC PAVER	0	0	0	0	7,402.00	SF	10.00	10.00	100	2015	2015	3	95	70,319	
13	0972	ST LGHT UN	0	0	0	0	2.00	UT	2,530.00	2,530.00	100	2015	2015	3	87	4,402	
14	0972	ST LGHT UN	0	0	0	0	9.00	UT	2,530.00	2,530.00	100	2015	2015	3	87	19,810	
15	0975	ST LT/ARM	0	0	0	0	4.00	UT	500.00	500.00	100	2015	2015	3	87	1,740	
16	0920	CWALL-WD/M	0	0	0	0	440.00	LF	390.00	390.00	100	2015	2015	3	65	111,540	
17	0424	CL FNC 6'	0	0	0	0	80.00	LF	20.00	20.00	100	2015	2015	3	87	1,392	
18	0810	CONCRETE A	0	0	20	20	400.00	SF	6.50	6.50	100	2015	2015	3	95	2,470	
19	0462	ST/AL FNC	0	0	0	0	3,870.00	SF	10.00	10.00	100	2015	2015	3	75	29,025	
20	0423	CL FNC 5'	0	0	0	0	1,700.00	LF	6.85	6.85	100	2015	2015	3	87	10,131	
21	0811	CONCRETE B	0	0	30	25	750.00	SF	5.20	5.20	100	2015	2015	3	95	3,705	

TOTAL OB/XF 254,534

VALUATION SUMMARY

VALUATION BY	DIRECT_CAP
Tax Group: 4	Tax Dist:
BUILDING MARKET VALUE	48,881,070
TOTAL MARKET OB/XF VALUE	0
TOTAL LAND VALUE - MARKET	0
TOTAL MARKET VALUE	51,453,758
SOH/AGL Deduction	0
ASSESSED VALUE	51,453,758
TOTAL EXEMPTION VALUE	0
BASE TAXABLE VALUE	51,453,758
TOTAL JUST VALUE	51,453,758
NCON VALUE	0
INCOME VALUE	51,453,758
PREVIOUS YEAR MKT VALUE	51,431,000

PERMIT NUM	DESCRIPTION	AMT	ISSUED
B1529769	BLDG 16 GARAGE 5C	223,380	02/24/2016
B1529760	BLDG 6 TYPE 2	2,791,975	02/23/2016
B1529768	BLDG 15 GARAGE 5A	172,329	02/23/2016
B1529759	BLDG 5 TYPE 1	2,605,333	02/22/2016
B1529761	BLDG 7 TYPE 2	2,791,975	02/22/2016
B1529575	BLDG 3	0	12/14/2015

SALES DATA

OFF RECORD Number	DATE	TYPE INST	Q / U	V / I	RSN CD	SALE PRICE
2204/0589	6/19/2018	SW	Q	I	01	51,300,000
GRANTOR: THE RESERVE AMELIA LL						
GRANTEE: BW AMELIA LLC						
1964/1815	2/23/2015	MS	U	I	11	0
GRANTOR: LFW RESERVE LLC						
GRANTEE: THE RESERVE AMELIA						

BUILDING NOTES

BUILDING DIMENSIONS

BAS=[YR=2015;ORIG=13,147] E3 E25 N9 W25 W3 N6 W3 N22 E13 E13 S3 E23 N3 E13 E13 S22 W3 S6 W3 W25 S9 E25 E3 S6 E3 S18 S4 W13 W13 N3 W23 S3 W13 W13 N4 N18 E3 N6 $
FUS=[YR=2015;LABEL=2ND FLR;ORIG=13,50] E3 E25 N9 W25 W3 N6 W3 N22 E13 E13 S3 E23 N3 E13 E13 S22 W3 S6 W3 W25 S9 E25 E3 S6 E3 S18 S4 W13 W13 N3 W23 S3 W13 W13 N4 N18 E3 N6 $
FUS=[YR=2015;LABEL=3RD FLR;ORIG=13,-43] E3 E25 N9 W25 W3 N6 W3 N22 E13 E13 S3 E23 N3 E13 E13 S22 W3 S6 W3 W25 S9 E25 E3 S6 E3 S18 S4 W13 W13 N3 W23 S3 W13 W13 N4 N18 E3 N6 $
BAS=[YR=2015;ORIG=-27,100] E26 S2 S4 S6 E6 S9 W1 S35 E1 S9 W6 S6 S4 S2 W26 N12 E3 N14 N25 N14 W3 N12 $
BAS=[YR=2015;ORIG=122,100] W26 S2 S4 S6 W6 S9 E1 S35 W1 S9 E3

LAND DESCRIPTION

LN	USE CODE	CLS	LAND USE DESCRIPTION	CAP	RD	LOC ZONE	FRONT	DEPTH	TOT LND UTS	UNIT TYPE	DT	DPTH FACT	% COND	TOT ADJ	UNIT PRICE	ADJ UNIT PRICE	LAND VALUE	OTHER ADJUSTMENTS AND NOTES	YEAR	DENSITY	DECL	FRZ	YR	CONSRV

REVIEW DATE 04/15/2025 BY KW Total Acres: 0.00 Total Land Value: 2,572,688 Market: 0 Agricultural: 0 Common: 0 PRINTED 07/30/2025 BY SYS

PT JOHN LOW GRANT
SEC 37-2N-27E & PT JOHN D
VAUGHAN GRANT SEC 38-2N-27E IN

BW AMELIA LLC
C/O BEACHWOLD PARTNERS LP, 257 PARK AVENUE SOUTH
NEW YORK, NY 10010

2025

37-2N-27-0000-0001-0110

NASSAU COUNTY PROPERTY

BUILDING CHARACTERISTICS

ELEMENT	CD	CONSTRUCTION
Exterior Wall	31	HARDIE BRD 100
Roof Structur	04	WOOD TRUSS 100
Roof Cover	03	COMP SHNGL 100
Interior Wall	05	DRYWALL 100
Interior Floo	14	CARPET 80
Interior Floo	07	CORK/VTILE 20
Air Condition	03	CENTRAL 100
Heating Type	04	AIR DUCTED 100
Bedrooms		1 100
Bathrooms		1 100
Frame	02	WOOD FRAME 100
Story Height		10 100
RMS		0 100
Units		24 100
Quality	05	Quality Level 05

DOR CODE 0300 MULTI-FAMILY

MAP NUM | MKT AREA 04

NEIGHBORHOOD/LOC 4005.00

AREA TYPE	TOTAL GROSS AREA	PCT OF BASE	YEAR	TOT ADJ AREA	SUBAREA MARKET VALUE
BAS	1,628	100	2015	1,628	313,780
BAS	1,628	100	2015	1,628	313,780
BAS	2,400	100	2015	2,400	462,574
BAS	2,400	100	2015	2,400	462,574
CAN	55	30	2015	16	3,084
CAN	55	30	2015	16	3,084
CAN	65	30	2015	20	3,854
CAN	65	30	2015	20	3,854
CAN	400	30	2015	120	23,128
CAN	400	30	2015	120	23,128
TOTALS	30,204			27,482	5,296,859

MARKET ADJUSTMENTS

TYPE	MDL	EFF. AREA	TOT ADJ PTS	EFF. BASE RATE	REPL. COST NEW	AYB	EYB	ECON	FNCT		NORM	% COND
0302	03	27,482	116.0520	200.77	5,517,561	2015	2015	0	0	0	4.00	96.00

3 APART/LUX – 0% - 0 Heated Area: 25860 HX Base Yr

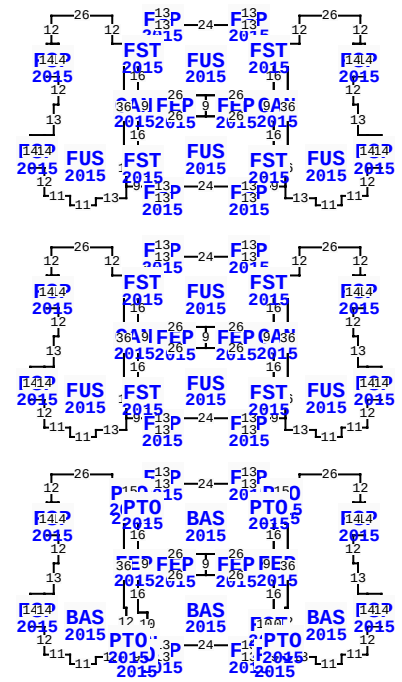

** This building has 69 Sub-Areas

86016 CHRISTIAN WAY, YULEE

BLD DATE	04/15/2025	KW	LGL DATE		
XF DATE	04/15/2025	KW	LAND DATE	04/28/2025	DC
INC DATE	04/15/2025	REA	AG DATE		

NASSAU COUNTY PROPERTY — VALUATION SUMMARY

VALUATION BY	DIRECT_CAP
Tax Group: 4	Tax Dist:
BUILDING MARKET VALUE	48,881,070
TOTAL MARKET OB/XF VALUE	0
TOTAL LAND VALUE - MARKET	0
TOTAL MARKET VALUE	51,453,758
SOH/AGL Deduction	0
ASSESSED VALUE	51,453,758
TOTAL EXEMPTION VALUE	0
BASE TAXABLE VALUE	51,453,758
TOTAL JUST VALUE	51,453,758
NCON VALUE	0
INCOME VALUE	51,453,758
PREVIOUS YEAR MKT VALUE	51,431,000

PERMIT NUM	DESCRIPTION	AMT	ISSUED
B1529758	BLDG 4	0	12/14/2015
B1529763	BLDG 9	0	12/14/2015
B1529764	BLDG 10	0	12/14/2015
B1529775	RENTBLDG	0	10/29/2015
B1529754	BLDG 1	0	10/15/2015
B1529756	BLDG 2	0	10/15/2015

SALES DATA

OFF RECORD Number	DATE	TYPE INST	Q / U	V / I	RSN CD	SALE PRICE
2204/0589	6/19/2018	SW	Q	I	01	51,300,000
GRANTOR: THE RESERVE AMELIA LL						
GRANTEE: BW AMELIA LLC						
1964/1815	2/23/2015	MS	U	I	11	0
GRANTOR: LFW RESERVE LLC						
GRANTEE: THE RESERVE AMELIA						

BUILDING NOTES

BUILDING DIMENSIONS

BAS=[YR=2015;ORIG=-10,100] E26 S7 S2 S3 E6 S4 S5 W1 S36 E1 S12 S4 S3 S2 W13 S3 W11 N4 W11 N12 N14 E4 N13 E2 N12 N14 W3 N12 $

BAS=[YR=2015;ORIG=122,100] W26 S7 S2 S3 W6 S4 S5 E1 S36 W1 S12 S4 S3 S2 E13 S3 E11 N4 E11 N12 N14 W4 N13 W2 N12 N14 E3 N12 $

FUS=[YR=2015;LABEL=2ND FLR;ORIG=-10,3] E26 S12 E6 S9 W1 S36 E1 S16 S5 W13 S3 W11 N4 W11 N12 N14 E4 N13 E2 N12 N14 W3 N12 $

FUS=[YR=2015;LABEL=2ND FLR;ORIG=122,3] W26 S12 W6 S9 E1 S36 W1 S16 S5 E13 S3 E11 N4 E11 N12 N14 W4 N13 W2 N12 N14 E3 N12 $

EXTRA FEATURES

LN	OB/XF CODE	DESCRIPTION	BLD	CAP	L	W	UNITS	UT	Adj R	ADJ UNIT PRICE	ORIG COND	YEAR ON	YEAR ACTUAL	Q	% COND	OB/XF MKT VALUE	NOTES
22	0819	CONC 12"	0	0	0	0	312.00	SF	9.50	9.50	100	2015	2015	3	95	2,816	
23	0972	ST LGHT UN	0	0	0	0	1.00	UT	2,530.00	2,530.00	100	2015	2015	3	87	2,201	
24	4950	BOLLARD	0	0	0	0	2.00	UT	100.00	100.00	100	2015	2015	3	100	200	
25	1123	CB 8"	0	0	0	0	600.00	SF	6.15	6.15	100	2015	2015	3	95	3,506	
26	0810	CONCRETE A	0	0	0	0	456.00	SF	6.50	6.50	100	2015	2015	3	95	2,816	
27	0810	CONCRETE A	0	0	0	0	197.00	SF	6.50	6.50	100	2015	2015	3	95	1,216	
28	0463	FENCE GATE	0	0	0	0	4.00	UT	450.00	450.00	100	2015	2015	3	87	1,566	
29	0803	ASPHALT C	0	0	0	0	32,579.00	SF	2.00	2.00	100	2015	2015	3	74	48,217	
30	0812	CONCRETE C	0	0	0	0	12,502.00	SF	4.00	4.00	100	2015	2015	3	95	47,508	
31	0400	CONC CURB	0	0	0	0	1,129.00	LF	15.00	15.00	100	2015	2015	3	96	16,258	

TOTAL OB/XF 126,304

LAND DESCRIPTION

LN	USE CODE	CLS	LAND USE DESCRIPTION	CAP	RD	LOC ZONE	FRONT	DEPTH	TOT LND UTS	UNIT TYPE	DT	DPTH FACT	% COND	TOT ADJ	UNIT PRICE	ADJ UNIT PRICE	LAND VALUE	OTHER ADJUSTMENTS AND NOTES	YEAR	DENSITY	DECL	FRZ	YR	CONSRV

REVIEW DATE 04/15/2025 BY KW Total Acres: 0.00 Total Land Value: 2,572,688 Market: 0 Agricultural: 0 Common: 0 PRINTED 07/30/2025 BY SYS

PT JOHN LOW GRANT
SEC 37-2N-27E & PT JOHN D
VAUGHAN GRANT SEC 38-2N-27E IN

BW AMELIA LLC
C/O BEACHWOLD PARTNERS LP, 257 PARK AVENUE SOUTH
NEW YORK, NY 10010

2025

37-2N-27-0000-0001-0110

NASSAU COUNTY PROPERTY

BUILDING CHARACTERISTICS

ELEMENT	CD	CONSTRUCTION
Exterior Wall	31	HARDIE BRD 100
Roof Structur	04	WOOD TRUSS 100
Roof Cover	03	COMP SHNGL 100
Interior Wall	05	DRYWALL 100
Interior Floo	14	CARPET 80
Interior Floo	07	CORK/VTILE 20
Air Condition	03	CENTRAL 100
Heating Type	04	AIR DUCTED 100
Bedrooms		2 100
Bathrooms		2 100
Frame	02	WOOD FRAME 100
Story Height		10 100
RMS		0 100
Units		24 100
Quality	05	Quality Level 05

DOR CODE	0300	MULTI-FAMILY	
MAP NUM		MKT AREA	04
NEIGHBORHOOD/LOC	4005.00		

AREA TYPE	TOTAL GROSS AREA	PCT OF BASE	YEAR	TOT ADJ AREA	SUBAREA MARKET VALUE
BAS	1,628	100	2015	1,628	323,031
BAS	1,628	100	2015	1,628	323,031
BAS	2,126	100	2015	2,126	421,846
BAS	2,126	100	2015	2,126	421,846
CAN	65	30	2015	20	3,969
CAN	65	30	2015	20	3,969
CAN	65	30	2015	20	3,969
CAN	75	30	2015	22	4,365
CAN	327	30	2015	98	19,446
CAN	327	30	2015	98	19,446
TOTALS	28,098			25,606	6,080,804

MARKET ADJUSTMENTS

TYPE	MDL	EFF. AREA	TOT ADJ PTS	EFF. BASE RATE	REPL. COST NEW	AYB	EYB	ECON	FNCT		NORM	% COND
0302	03	25,606	119.4720	206.69	5,292,504	2015	2015	0	0	0	4.00	96.00

4 APART/LUX – 0% - 0 Heated Area: 24116 HX Base Yr

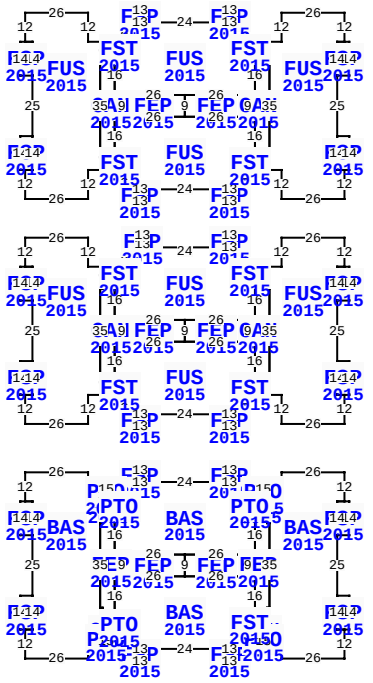

** This building has 68 Sub-Areas

86016 CHRISTIAN WAY, YULEE

BLD DATE	04/15/2025	KW	LGL DATE	
XF DATE	04/15/2025	KW	LAND DATE	04/28/2025 DC
INC DATE	04/15/2025	REA	AG DATE	

NASSAU COUNTY PROPERTY — VALUATION SUMMARY

VALUATION BY	DIRECT_CAP
Tax Group: 4	Tax Dist:
BUILDING MARKET VALUE	48,881,070
TOTAL MARKET OB/XF VALUE	0
TOTAL LAND VALUE - MARKET	0
TOTAL MARKET VALUE	51,453,758
SOH/AGL Deduction	0
ASSESSED VALUE	51,453,758
TOTAL EXEMPTION VALUE	0
BASE TAXABLE VALUE	51,453,758
TOTAL JUST VALUE	51,453,758
NCON VALUE	0
INCOME VALUE	51,453,758
PREVIOUS YEAR MKT VALUE	51,431,000

PERMIT NUM	DESCRIPTION	AMT	ISSUED
B1529774	LEASEOFF	0	10/15/2015
B1530552	TRASH CONTAINER	58,000	06/01/2015
M1521082	BLDG 2 APT TYPE 3	0	05/01/2015
M1521085	BLDG 3 APT TYPE 2	0	05/01/2015
M1521086	BLDG 4 APT TYPE 1	0	05/01/2015
M1521087	BLDG 5 APT TYPE 1	0	05/01/2015

SALES DATA

OFF RECORD Number	DATE	TYPE INST	Q / U	V / I	RSN CD	SALE PRICE
2204/0589	6/19/2018	SW	Q	I	01	51,300,000
GRANTOR: THE RESERVE AMELIA LL						
GRANTEE: BW AMELIA LLC						
1964/1815	2/23/2015	MS	U	I	11	0
GRANTOR: LFW RESERVE LLC						
GRANTEE: THE RESERVE AMELIA						

BUILDING NOTES

EXTRA FEATURES

LN	OB/XF CODE	DESCRIPTION	BLD	CAP	L	W	UNITS	UT	Adj R	ADJ UNIT PRICE	ORIG COND	YEAR ON	YEAR ACTUAL	Q	% COND	OB/XF MKT VALUE	NOTES
32	0803	ASPHALT C	0	0	0	0	40,568.00	SF	2.00	2.00	100	2015	2015	3	74	60,041	
33	0400	CONC CURB	0	0	0	0	1,376.00	LF	15.00	15.00	100	2015	2015	3	96	19,814	
34	0966	FIRE SPRNK	1	0	0	0	24,168.00	SF	3.00	3.00	100	2015	2015	3	95	68,879	
35	0966	FIRE SPRNK	2	0	0	0	25,077.00	SF	3.00	3.00	100	2015	2015	3	95	71,469	
36	0966	FIRE SPRNK	3	0	0	0	24,168.00	SF	3.00	3.00	100	2015	2015	3	95	68,879	
37	0966	FIRE SPRNK	4	0	0	0	22,524.00	SF	3.00	3.00	100	2015	2015	3	95	64,193	
38	0966	FIRE SPRNK	9	0	0	0	22,524.00	SF	3.00	3.00	100	2015	2015	3	95	64,193	
39	0966	FIRE SPRNK	10	0	0	0	13,884.00	SF	3.00	3.00	100	2015	2015	3	95	39,569	
40	0350	CARPORT WD	0	0	0	0	713.00	SF	22.75	22.75	100	2015	2015	3	65	10,543	
41	0402	CONC BUMPE	0	0	0	0	33.00	UT	25.00	25.00	100	2015	2015	3	96	792	

TOTAL OB/XF 468,372

BUILDING DIMENSIONS

BAS=[YR=2015;ORIG=-10,100] E26 S7 S2 S3 E6 S4 S5 W1 S35 E1 S5 S4 W6 S3 S2 S7 W26 N12 E3 N14 N25 N14 W3 N12 $
BAS=[YR=2015;ORIG=122,100] W26 S7 S2 S3 W6 S4 S5 E1 S35 W1 S5 S4 E6 S3 S2 S7 E26 N12 W3 N14 N25 N14 E3 N12 $
FUS=[YR=2015;LABEL=3RD FLR;ORIG=-10,-90] E26 S12 E6 S9 W1 S35 E1 S9 W6 S12 W26 N12 E3 N14 N25 N14 W3 N12 $
FUS=[YR=2015;LABEL=2ND FLR;ORIG=-10,3] E26 S12 E6 S9 W1 S35 E1 S9 W6 S12 W26 N12 E3 N14 N25 N14 W3 N12 $
FUS=[YR=2015;LABEL=3RD FLR;ORIG=122,-90] W26 S12 W6 S9 E1 S35 W1 S9 E6 S12 E26 N12 W3 N14 N25 N14 E3 N12 $
FUS=[YR=2015;LABEL=2ND FLR;ORIG=122,3] W26 S12 W6 S9 E1 S35 W1 S9 E6 S12 E26 N12 W3 N14 N25 N14 E3 N12 $

LAND DESCRIPTION

LN	USE CODE	CLS	LAND USE DESCRIPTION	CAP	RD	LOC ZONE	FRONT	DEPTH	TOT LND UTS	UNIT TYPE	DT	DPTH FACT	% COND	TOT ADJ	UNIT PRICE	ADJ UNIT PRICE	LAND VALUE	OTHER ADJUSTMENTS AND NOTES	YEAR	DENSITY	DECL	FRZ	YR	CONSRV

REVIEW DATE 04/15/2025 BY KW Total Acres: 0.00 Total Land Value: 2,572,688 Market: 0 Agricultural: 0 Common: 0 PRINTED 07/30/2025 BY SYS

PT JOHN LOW GRANT
SEC 37-2N-27E & PT JOHN D
VAUGHAN GRANT SEC 38-2N-27E IN

BW AMELIA LLC
C/O BEACHWOLD PARTNERS LP, 257 PARK AVENUE SOUTH
NEW YORK, NY 10010

2025

37-2N-27-0000-0001-0110

NASSAU COUNTY PROPERTY

BUILDING CHARACTERISTICS

ELEMENT	CD	CONSTRUCTION
Exterior Wall	31	HARDIE BRD 100
Roof Structur	04	WOOD TRUSS 100
Roof Cover	03	COMP SHNGL 100
Interior Wall	05	DRYWALL 100
Interior Floo	14	CARPET 80
Interior Floo	07	CORK/VTILE 20
Air Condition	03	CENTRAL 100
Heating Type	04	AIR DUCTED 100
Bedrooms		2 100
Bathrooms		2 100
Frame	02	WOOD FRAME 100
Story Height		10 100
RMS		0 100
Units		24 100
Quality	05	Quality Level 05

DOR CODE 0300 MULTI-FAMILY

MAP NUM | MKT AREA 04

NEIGHBORHOOD/LOC 4005.00

AREA TYPE	TOTAL GROSS AREA	PCT OF BASE	YEAR	TOT ADJ AREA	SUBAREA MARKET VALUE
BAS	1,628	100	2015	1,628	324,714
BAS	1,628	100	2015	1,628	324,714
BAS	2,126	100	2015	2,126	424,043
BAS	2,126	100	2015	2,126	424,043
CAN	65	30	2015	20	3,989
CAN	65	30	2015	20	3,989
CAN	65	30	2015	20	3,989
CAN	75	30	2015	22	4,388
CAN	327	30	2015	98	19,547
CAN	327	30	2015	98	19,547
TOTALS	28,098			25,606	6,107,266

MARKET ADJUSTMENTS

TYPE	MDL	EFF. AREA	TOT ADJ PTS	EFF. BASE RATE	REPL. COST NEW	AYB	EYB	ECON	FNCT		NORM	% COND
0302	03	25,606	119.4720	206.69	5,292,504	2016	2016	0	0	0	3.50	96.50

5 APART/LUX – 0% - 0 Heated Area: 24116 HX Base Yr

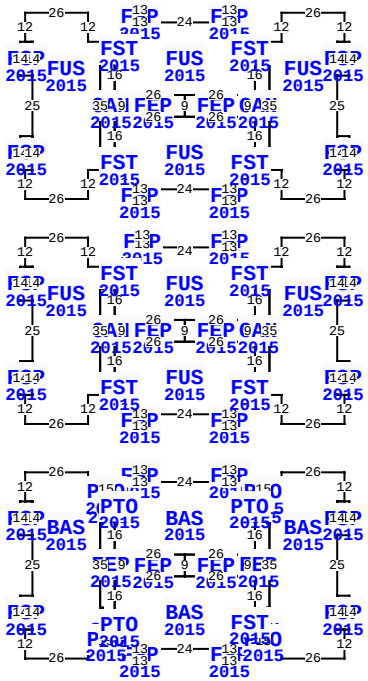

** This building has 68 Sub-Areas

86016 CHRISTIAN WAY, YULEE

BLD DATE	04/15/2025	KW	LGL DATE	
XF DATE	04/15/2025	KW	LAND DATE	04/28/2025 DC
INC DATE	04/15/2025	REA	AG DATE	

VALUATION SUMMARY

VALUATION BY	DIRECT_CAP
Tax Group: 4	Tax Dist:
BUILDING MARKET VALUE	48,881,070
TOTAL MARKET OB/XF VALUE	0
TOTAL LAND VALUE - MARKET	0
TOTAL MARKET VALUE	51,453,758
SOH/AGL Deduction	0
ASSESSED VALUE	51,453,758
TOTAL EXEMPTION VALUE	0
BASE TAXABLE VALUE	51,453,758
TOTAL JUST VALUE	51,453,758
NCON VALUE	0
INCOME VALUE	51,453,758
PREVIOUS YEAR MKT VALUE	51,431,000

PERMIT NUM	DESCRIPTION	AMT	ISSUED
M1521088	BLDG 6 APT TYPE 2	0	05/01/2015
M1521089	BLDG 7 APT TYPE 2	0	05/01/2015
M1521090	BLDG 8 APT TYPE 2	0	05/01/2015
M1521091	BLDG 9 APT TYPE 1	0	05/01/2015
M1521092	BLDG 10 APT TYPE	0	05/01/2015
M1521093	BLDG 11 APT TYPE	0	05/01/2015

SALES DATA

OFF RECORD Number	DATE	TYPE INST	Q / U	V / I	RSN CD	SALE PRICE
2204/0589	6/19/2018	SW	Q	I	01	51,300,000
GRANTOR: THE RESERVE AMELIA LL						
GRANTEE: BW AMELIA LLC						
1964/1815	2/23/2015	MS	U	I	11	0
GRANTOR: LFW RESERVE LLC						
GRANTEE: THE RESERVE AMELIA						

BUILDING NOTES

BUILDING DIMENSIONS

BAS=[YR=2015;ORIG=-10,100] E26 S7 S2 S3 E6 S4 S5 W1 S35 E1 S5 S4 W6 S3 S2 S7 W26 N12 E3 N14 N25 N14 W3 N12 $
BAS=[YR=2015;ORIG=122,100] W26 S7 S2 S3 W6 S4 S5 E1 S35 W1 S5 S4 E6 S3 S2 S7 E26 N12 W3 N14 N25 N14 E3 N12 $
FUS=[YR=2015;LABEL=3RD FLR;ORIG=-10,-90] E26 S12 E6 S9 W1 S35 E1 S9 W6 S12 W26 N12 E3 N14 N25 N14 W3 N12 $
FUS=[YR=2015;LABEL=2ND FLR;ORIG=-10,3] E26 S12 E6 S9 W1 S35 E1 S9 W6 S12 W26 N12 E3 N14 N25 N14 W3 N12 $
FUS=[YR=2015;LABEL=3RD FLR;ORIG=122,-90] W26 S12 W6 S9 E1 S35 W1 S9 E6 S12 E26 N12 W3 N14 N25 N14 E3 N12 $
FUS=[YR=2015;LABEL=2ND FLR;ORIG=122,3] W26 S12 W6 S9 E1 S35 W1 S9 E6 S12 E26 N12 W3 N14 N25 N14 E3 N12 $

EXTRA FEATURES

LN	OB/XF CODE	DESCRIPTION	BLD	CAP	L	W	UNITS	UT	Adj R	ADJ UNIT PRICE	ORIG COND	YEAR ON	YEAR ACTUAL	Q	% COND	OB/XF MKT VALUE	NOTES
42	0812	CONCRETE C	0	0	0	0	1,170.00	SF	4.00	4.00	100	2016	2016	3	95	4,446	
43	0400	CONC CURB	0	0	0	0	83.00	LF	15.00	15.00	100	2016	2016	3	97	1,208	
44	0803	ASPHALT C	0	0	0	0	12,402.00	SF	2.00	2.00	100	2016	2016	3	76	18,851	
45	0400	CONC CURB	0	0	0	0	709.00	LF	15.00	15.00	100	2016	2016	3	97	10,316	
46	0812	CONCRETE C	0	0	0	0	1,232.00	SF	4.00	4.00	100	2016	2016	3	95	4,682	
47	0400	CONC CURB	0	0	0	0	264.00	LF	15.00	15.00	100	2016	2016	3	97	3,841	
48	0803	ASPHALT C	0	0	0	0	4,294.00	SF	2.00	2.00	100	2016	2016	3	76	6,527	
49	0803	ASPHALT C	0	0	0	0	4,332.00	SF	2.00	2.00	100	2016	2016	3	76	6,585	
50	0400	CONC CURB	0	0	0	0	260.00	LF	15.00	15.00	100	2016	2016	3	97	3,783	
51	0811	CONCRETE B	0	0	131	4	524.00	SF	5.20	5.20	100	2016	2016	3	95	2,589	

TOTAL OB/XF 62,828

LAND DESCRIPTION

LN	USE CODE	CLS	LAND USE DESCRIPTION	CAP	RD	LOC ZONE	FRONT	DEPTH	TOT LND UTS	UNIT TYPE	DT	DPTH FACT	% COND	TOT ADJ	UNIT PRICE	ADJ UNIT PRICE	LAND VALUE	OTHER ADJUSTMENTS AND NOTES	YEAR	DENSITY	DECL	FRZ	YR	CONSRV

REVIEW DATE 04/15/2025 BY KW Total Acres: 0.00 Total Land Value: 2,572,688 Market: 0 Agricultural: 0 Common: 0 PRINTED 07/30/2025 BY SYS

PT JOHN LOW GRANT
SEC 37-2N-27E & PT JOHN D
VAUGHAN GRANT SEC 38-2N-27E IN

BW AMELIA LLC
C/O BEACHWOLD PARTNERS LP, 257 PARK AVENUE SOUTH
NEW YORK, NY 10010

2025

37-2N-27-0000-0001-0110

NASSAU COUNTY PROPERTY

BUILDING CHARACTERISTICS

ELEMENT	CD	CONSTRUCTION
Exterior Wall	31	HARDIE BRD 100
Roof Structur	04	WOOD TRUSS 100
Roof Cover	03	COMP SHNGL 100
Interior Wall	05	DRYWALL 100
Interior Floo	14	CARPET 80
Interior Floo	07	CORK/VTILE 20
Air Condition	03	CENTRAL 100
Heating Type	04	AIR DUCTED 100
Bedrooms		1 100
Bathrooms		1 100
Frame	02	WOOD FRAME 100
Story Height		10 100
RMS		0 100
Units		24 100
Quality	05	Quality Level 05

DOR CODE 0300 MULTI-FAMILY

MAP NUM | MKT AREA 04

NEIGHBORHOOD/LOC 4005.00

AREA TYPE	TOTAL GROSS AREA	PCT OF BASE	YEAR	TOT ADJ AREA	SUBAREA MARKET VALUE
BAS	1,628	100	2015	1,628	315,414
BAS	1,628	100	2015	1,628	315,414
BAS	2,400	100	2015	2,400	464,983
BAS	2,400	100	2015	2,400	464,983
CAN	55	30	2015	16	3,100
CAN	55	30	2015	16	3,100
CAN	65	30	2015	20	3,874
CAN	65	30	2015	20	3,874
CAN	400	30	2015	120	23,249
CAN	400	30	2015	120	23,249
TOTALS	30,204			27,482	5,324,446

MARKET ADJUSTMENTS

TYPE	MDL	EFF. AREA	TOT ADJ PTS	EFF. BASE RATE	REPL. COST NEW	AYB	EYB	ECON	FNCT		NORM	% COND
0302	03	27,482	116.0520	200.77	5,517,561	2016	2016	0	0	0	3.50	96.50

6 APART/LUX – 0% - 0 Heated Area: 25860 HX Base Yr

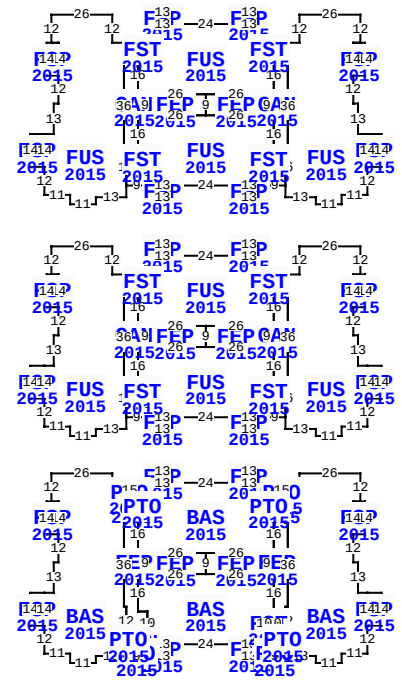

** This building has 69 Sub-Areas

86016 CHRISTIAN WAY, YULEE

BLD DATE	04/15/2025	KW	LGL DATE		
XF DATE	04/15/2025	KW	LAND DATE	04/28/2025	DC
INC DATE	04/15/2025	REA	AG DATE		

VALUATION SUMMARY

VALUATION BY	DIRECT_CAP
Tax Group: 4	Tax Dist:
BUILDING MARKET VALUE	48,881,070
TOTAL MARKET OB/XF VALUE	0
TOTAL LAND VALUE - MARKET	0
TOTAL MARKET VALUE	51,453,758
SOH/AGL Deduction	0
ASSESSED VALUE	51,453,758
TOTAL EXEMPTION VALUE	0
BASE TAXABLE VALUE	51,453,758
TOTAL JUST VALUE	51,453,758
NCON VALUE	0
INCOME VALUE	51,453,758
PREVIOUS YEAR MKT VALUE	51,431,000

PERMIT NUM	DESCRIPTION	AMT	ISSUED
M1521094	BLDG 12 APT TYPE	0	05/01/2015
M1521095	BLDG 13 APT TYPE	0	05/01/2015
E1529092	BLDG 1 APT TYPE 2	0	04/01/2015
E1529093	BLDG 2 APT TYPE 3	0	04/01/2015
E1529094	BLDG 10 APT TYPE	0	04/01/2015
E1528877	BLDG 5 APT TYPE 1	0	03/01/2015

SALES DATA

OFF RECORD Number	DATE	TYPE INST	Q / U	V / I	RSN CD	SALE PRICE
2204/0589	6/19/2018	SW	Q	I	01	51,300,000
GRANTOR: THE RESERVE AMELIA LL						
GRANTEE: BW AMELIA LLC						
1964/1815	2/23/2015	MS	U	I	11	0
GRANTOR: LFW RESERVE LLC						
GRANTEE: THE RESERVE AMELIA						

BUILDING NOTES

BUILDING DIMENSIONS

BAS=[YR=2015;ORIG=-10,100] E26 S7 S2 S3 E6 S4 S5 W1 S36 E1 S12 S4 S3 S2 W13 S3 W11 N4 W11 N12 N14 E4 N13 E2 N12 N14 W3 N12 $
BAS=[YR=2015;ORIG=122,100] W26 S7 S2 S3 W6 S4 S5 E1 S36 W1 S12 S4 S3 S2 E13 S3 E11 N4 E11 N12 N14 W4 N13 W2 N12 N14 E3 N12 $
FUS=[YR=2015;LABEL=2ND FLR;ORIG=-10,3] E26 S12 E6 S9 W1 S36 E1 S16 S5 W13 S3 W11 N4 W11 N12 N14 E4 N13 E2 N12 N14 W3 N12 $
FUS=[YR=2015;LABEL=2ND FLR;ORIG=122,3] W26 S12 W6 S9 E1 S36 W1 S16 S5 E13 S3 E11 N4 E11 N12 N14 W4 N13 W2 N12 N14 E3 N12 $

EXTRA FEATURES

LN	OB/XF CODE	DESCRIPTION	BLD	CAP	L	W	UNITS	UT	Adj R	ADJ UNIT PRICE	ORIG COND	YEAR ON	YEAR ACTUAL	Q	% COND	OB/XF MKT VALUE	NOTES
52	0812	CONCRETE C	0	0	0	0	1,984.00	SF	4.00	4.00	100	2016	2016	3	95	7,539	
53	0400	CONC CURB	0	0	0	0	173.00	LF	15.00	15.00	100	2016	2016	3	97	2,517	
54	0803	ASPHALT C	0	0	0	0	4,176.00	SF	2.00	2.00	100	2016	2016	3	76	6,348	
55	0400	CONC CURB	0	0	0	0	810.00	LF	15.00	15.00	100	2016	2016	3	97	11,786	
56	0803	ASPHALT C	0	0	0	0	7,315.00	SF	2.00	2.00	100	2016	2016	3	76	11,119	
57	0400	CONC CURB	0	0	0	0	290.00	LF	15.00	15.00	100	2016	2016	3	97	4,220	
58	0300	BOAT DCK W	0	0	0	0	445.00	SF	40.00	40.00	100	2016	2016	3	78	13,884	
59	0462	ST/AL FNC	0	0	0	0	2,110.00	SF	10.00	10.00	100	2016	2016	3	78	16,458	
60	0810	CONCRETE A	0	0	0	0	60.00	SF	6.50	6.50	100	2016	2016	3	95	371	
61	0803	ASPHALT C	0	0	0	0	5,517.00	SF	2.00	2.00	100	2016	2016	3	76	8,386	

TOTAL OB/XF 82,628

LAND DESCRIPTION

LN	USE CODE	CLS	LAND USE DESCRIPTION	CAP	RD	LOC ZONE	FRONT	DEPTH	TOT LND UTS	UNIT TYPE	DT	DPTH FACT	% COND	TOT ADJ	UNIT PRICE	ADJ UNIT PRICE	LAND VALUE	OTHER ADJUSTMENTS AND NOTES	YEAR	DENSITY	DECL	FRZ	YR	CONSRV

REVIEW DATE 04/15/2025 BY KW Total Acres: 0.00 Total Land Value: 2,572,688 Market: 0 Agricultural: 0 Common: 0 PRINTED 07/30/2025 BY SYS

PT JOHN LOW GRANT
SEC 37-2N-27E & PT JOHN D
VAUGHAN GRANT SEC 38-2N-27E IN

BW AMELIA LLC
C/O BEACHWOLD PARTNERS LP, 257 PARK AVENUE SOUTH
NEW YORK, NY 10010

2025

37-2N-27-0000-0001-0110

NASSAU COUNTY PROPERTY

BUILDING CHARACTERISTICS

ELEMENT	CD	CONSTRUCTION
Exterior Wall	31	HARDIE BRD 100
Roof Structur	04	WOOD TRUSS 100
Roof Cover	03	COMP SHNGL 100
Interior Wall	05	DRYWALL 100
Interior Floo	14	CARPET 80
Interior Floo	07	CORK/VTILE 20
Air Condition	03	CENTRAL 100
Heating Type	04	AIR DUCTED 100
Bedrooms		1 100
Bathrooms		1 100
Frame	02	WOOD FRAME 100
Story Height		10 100
RMS		0 100
Units		24 100
Quality	05	Quality Level 05

DOR CODE	0300	MULTI-FAMILY	
MAP NUM		MKT AREA	04
NEIGHBORHOOD/LOC	4005.00		

AREA TYPE	TOTAL GROSS AREA	PCT OF BASE	YEAR	TOT ADJ AREA	SUBAREA MARKET VALUE
BAS	1,628	100	2015	1,628	315,414
BAS	1,628	100	2015	1,628	315,414
BAS	2,400	100	2015	2,400	464,983
BAS	2,400	100	2015	2,400	464,983
CAN	55	30	2015	16	3,100
CAN	55	30	2015	16	3,100
CAN	65	30	2015	20	3,874
CAN	65	30	2015	20	3,874
CAN	400	30	2015	120	23,249
CAN	400	30	2015	120	23,249
TOTALS	30,204			27,482	5,324,446

MARKET ADJUSTMENTS

TYPE	MDL	EFF. AREA	TOT ADJ PTS	EFF. BASE RATE	REPL. COST NEW	AYB	EYB	ECON	FNCT		NORM	% COND
0302	03	27,482	116.0520	200.77	5,517,561	2016	2016	0	0	0	3.50	96.50

7 APART/LUX – 0% - 0 Heated Area: 25860 HX Base Yr

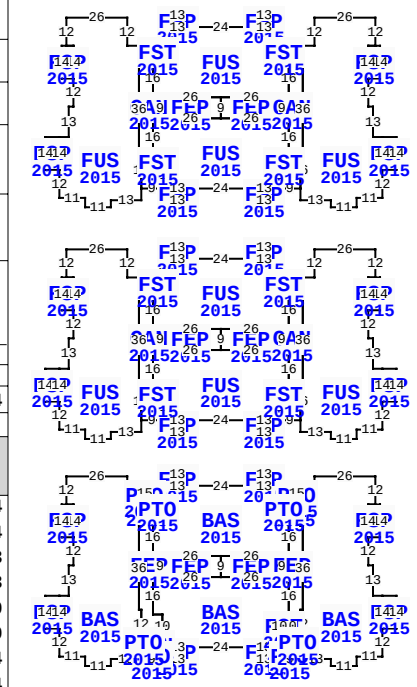

** This building has 69 Sub-Areas

86016 CHRISTIAN WAY, YULEE

BLD DATE	04/15/2025	KW	LGL DATE		
XF DATE	04/15/2025	KW	LAND DATE	04/28/2025	DC
INC DATE	04/15/2025	REA	AG DATE		

NASSAU COUNTY PROPERTY — VALUATION SUMMARY

VALUATION BY	DIRECT_CAP
Tax Group: 4	Tax Dist:
BUILDING MARKET VALUE	48,881,070
TOTAL MARKET OB/XF VALUE	0
TOTAL LAND VALUE - MARKET	0
TOTAL MARKET VALUE	51,453,758
SOH/AGL Deduction	0
ASSESSED VALUE	51,453,758
TOTAL EXEMPTION VALUE	0
BASE TAXABLE VALUE	51,453,758
TOTAL JUST VALUE	51,453,758
NCON VALUE	0
INCOME VALUE	51,453,758
PREVIOUS YEAR MKT VALUE	51,431,000

PERMIT NUM	DESCRIPTION	AMT	ISSUED
E1528878	BLDG 4 APT TYPE 1	0	03/01/2015
E1528879	BLDG 18 GARAGE 5B	0	03/01/2015
E1528880	BLDG 19 GARAGE 5B	0	03/01/2015
E1528881	BLDG 20 POOL BLDG	0	03/01/2015
E1528882	BLDG 9 TYPE 1	0	03/01/2015
E1528868	BLDG 17 GARAGE 5D	0	03/01/2015

SALES DATA

OFF RECORD Number	DATE	TYPE INST	Q / U	V / I	RSN CD	SALE PRICE
2204/0589	6/19/2018	SW	Q	I	01	51,300,000
GRANTOR: THE RESERVE AMELIA LL						
GRANTEE: BW AMELIA LLC						
1964/1815	2/23/2015	MS	U	I	11	0
GRANTOR: LFW RESERVE LLC						
GRANTEE: THE RESERVE AMELIA						

BUILDING NOTES

BUILDING DIMENSIONS

BAS=[YR=2015;ORIG=-10,100] E26 S7 S2 S3 E6 S4 S5 W1 S36 E1 S12 S4 S3 S2 W13 S3 W11 N4 W11 N12 N14 E4 N13 E2 N12 N14 W3 N12 $
BAS=[YR=2015;ORIG=122,100] W26 S7 S2 S3 W6 S4 S5 E1 S36 W1 S12 S4 S3 S2 E13 S3 E11 N4 E11 N12 N14 W4 N13 W2 N12 N14 E3 N12 $
FUS=[YR=2015;LABEL=2ND FLR;ORIG=-10,3] E26 S12 E6 S9 W1 S36 E1 S16 S5 W13 S3 W11 N4 W11 N12 N14 E4 N13 E2 N12 N14 W3 N12 $
FUS=[YR=2015;LABEL=2ND FLR;ORIG=122,3] W26 S12 W6 S9 E1 S36 W1 S16 S5 E13 S3 E11 N4 E11 N12 N14 W4 N13 W2 N12 N14 E3 N12 $

EXTRA FEATURES

LN	OB/XF CODE	DESCRIPTION	BLD	CAP	L	W	UNITS	UT	Adj R	ADJ UNIT PRICE	ORIG COND	YEAR ON	YEAR ACTUAL	Q	% COND	OB/XF MKT VALUE	NOTES
62	0812	CONCRETE C	0	0	0	0	3,282.00	SF	4.00	4.00	100	2016	2016	3	95	12,472	
63	0462	ST/AL FNC	0	0	0	0	516.00	SF	10.00	10.00	100	2016	2016	3	78	4,025	
64	0819	CONC 12"	0	0	0	0	52.00	SF	9.50	9.50	100	2016	2016	3	95	469	
65	0400	CONC CURB	0	0	0	0	239.00	LF	15.00	15.00	100	2016	2016	3	97	3,477	
66	0803	ASPHALT C	0	0	0	0	10,236.00	SF	2.00	2.00	100	2016	2016	3	76	15,559	
67	0812	CONCRETE C	0	0	206	5	1,030.00	SF	4.00	4.00	100	2016	2016	3	95	3,914	
68	0803	ASPHALT C	0	0	125	24	3,000.00	SF	2.00	2.00	100	2016	2016	3	76	4,560	
69	0400	CONC CURB	0	0	0	0	197.00	LF	15.00	15.00	100	2016	2016	3	97	2,866	
70	0400	CONC CURB	0	0	0	0	285.00	LF	15.00	15.00	100	2016	2016	3	97	4,147	
71	0402	CONC BUMPE	0	0	0	0	34.00	UT	25.00	25.00	100	2016	2016	3	97	825	

TOTAL OB/XF 52,314

LAND DESCRIPTION

LN	USE CODE	CLS	LAND USE DESCRIPTION	CAP	RD	LOC ZONE	FRONT	DEPTH	TOT LND UTS	UNIT TYPE	DT	DPTH FACT	% COND	TOT ADJ	UNIT PRICE	ADJ UNIT PRICE	LAND VALUE	OTHER ADJUSTMENTS AND NOTES	YEAR	DENSITY	DECL	FRZ	YR	CONSRV

REVIEW DATE 04/15/2025 BY KW Total Acres: 0.00 Total Land Value: 2,572,688 Market: 0 Agricultural: 0 Common: 0 PRINTED 07/30/2025 BY SYS

PT JOHN LOW GRANT
SEC 37-2N-27E & PT JOHN D
VAUGHAN GRANT SEC 38-2N-27E IN

BW AMELIA LLC
C/O BEACHWOLD PARTNERS LP, 257 PARK AVENUE SOUTH
NEW YORK, NY 10010

2025

37-2N-27-0000-0001-0110

NASSAU COUNTY PROPERTY

BUILDING CHARACTERISTICS

ELEMENT	CD	CONSTRUCTION
Exterior Wall	31	HARDIE BRD 100
Roof Structur	04	WOOD TRUSS 100
Roof Cover	03	COMP SHNGL 100
Interior Wall	05	DRYWALL 100
Interior Floo	14	CARPET 80
Interior Floo	07	CORK/VTILE 20
Air Condition	03	CENTRAL 100
Heating Type	04	AIR DUCTED 100
Bedrooms		1 100
Bathrooms		1 100
Frame	02	WOOD FRAME 100
Story Height		10 100
RMS		0 100
Units		24 100
Quality	05	Quality Level 05

DOR CODE 0300 MULTI-FAMILY

MAP NUM | MKT AREA 04

NEIGHBORHOOD/LOC 4005.00

AREA TYPE	TOTAL GROSS AREA	PCT OF BASE	YEAR	TOT ADJ AREA	SUBAREA MARKET VALUE
BAS	1,628	100	2015	1,628	315,414
BAS	1,628	100	2015	1,628	315,414
BAS	2,400	100	2015	2,400	464,983
BAS	2,400	100	2015	2,400	464,983
CAN	55	30	2015	16	3,100
CAN	55	30	2015	16	3,100
CAN	65	30	2015	20	3,874
CAN	65	30	2015	20	3,874
CAN	400	30	2015	120	23,249
CAN	400	30	2015	120	23,249
TOTALS	30,204			27,482	5,324,446

MARKET ADJUSTMENTS

TYPE	MDL	EFF. AREA	TOT ADJ PTS	EFF. BASE RATE	REPL. COST NEW	AYB	EYB	ECON	FNCT		NORM	% COND
0302	03	27,482	116.0520	200.77	5,517,561	2016	2016	0	0	0	3.50	96.50

8 APART/LUX – 0% - 0 Heated Area: 25860 HX Base Yr

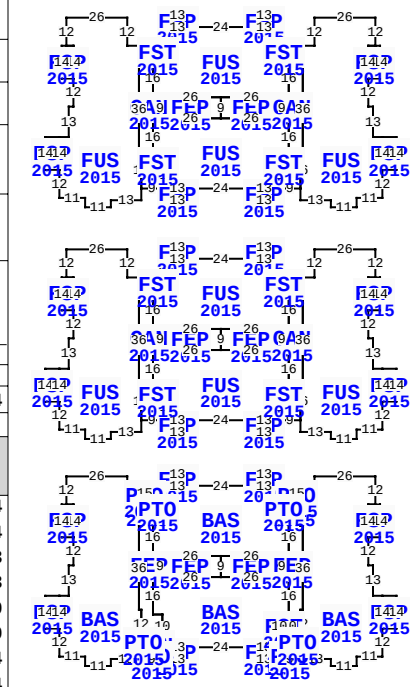

** This building has 69 Sub-Areas

86016 CHRISTIAN WAY, YULEE

BLD DATE	04/15/2025	KW	LGL DATE	
XF DATE	04/15/2025	KW	LAND DATE	04/28/2025 DC
INC DATE	04/15/2025	REA	AG DATE	

NASSAU COUNTY PROPERTY — VALUATION SUMMARY

VALUATION BY	DIRECT_CAP
Tax Group: 4	Tax Dist:
BUILDING MARKET VALUE	48,881,070
TOTAL MARKET OB/XF VALUE	0
TOTAL LAND VALUE - MARKET	0
TOTAL MARKET VALUE	51,453,758
SOH/AGL Deduction	0
ASSESSED VALUE	51,453,758
TOTAL EXEMPTION VALUE	0
BASE TAXABLE VALUE	51,453,758
TOTAL JUST VALUE	51,453,758
NCON VALUE	0
INCOME VALUE	51,453,758
PREVIOUS YEAR MKT VALUE	51,431,000

PERMIT NUM	DESCRIPTION	AMT	ISSUED
E1528869	BLDG 16 GARAGE 5C	0	03/01/2015
E1528870	BLDG 15 GARAGE 5A	0	03/01/2015
E1528871	BLDG 13 APT TYPE	0	03/01/2015
E1528872	BLDG 12 APT TYPE	0	03/01/2015
E1528873	BLDG 11 APT TYPE	0	03/01/2015
E1528874	BLDG 7 APT TYPE 2	0	03/01/2015

SALES DATA

OFF RECORD Number	DATE	TYPE INST	Q / U	V / I	RSN CD	SALE PRICE
2204/0589	6/19/2018	SW	Q	I	01	51,300,000
GRANTOR: THE RESERVE AMELIA LL						
GRANTEE: BW AMELIA LLC						
1964/1815	2/23/2015	MS	U	I	11	0
GRANTOR: LFW RESERVE LLC						
GRANTEE: THE RESERVE AMELIA						

BUILDING NOTES

BUILDING DIMENSIONS

BAS=[YR=2015;ORIG=-10,100] E26 S7 S2 S3 E6 S4 S5 W1 S36 E1 S12 S4 S3 S2 W13 S3 W11 N4 W11 N12 N14 E4 N13 E2 N12 N14 W3 N12 $

BAS=[YR=2015;ORIG=122,100] W26 S7 S2 S3 W6 S4 S5 E1 S36 W1 S12 S4 S3 S2 E13 S3 E11 N4 E11 N12 N14 W4 N13 W2 N12 N14 E3 N12 $

FUS=[YR=2015;LABEL=2ND FLR;ORIG=-10,3] E26 S12 E6 S9 W1 S36 E1 S16 S5 W13 S3 W11 N4 W11 N12 N14 E4 N13 E2 N12 N14 W3 N12 $

FUS=[YR=2015;LABEL=2ND FLR;ORIG=122,3] W26 S12 W6 S9 E1 S36 W1 S16 S5 E13 S3 E11 N4 E11 N12 N14 W4 N13 W2 N12 N14 E3 N12 $

EXTRA FEATURES

LN	OB/XF CODE	DESCRIPTION	BLD	CAP	L	W	UNITS	UT	Adj R	ADJ UNIT PRICE	ORIG COND	YEAR ON	YEAR ACTUAL	Q	% COND	OB/XF MKT VALUE	NOTES
72	0803	ASPHALT C	0	0	0	0	19,263.00	SF	2.00	2.00	100	2016	2016	3	76	29,280	
73	0803	ASPHALT C	0	0	0	0	22,997.00	SF	2.00	2.00	100	2016	2016	3	76	34,955	
74	0803	ASPHALT C	0	0	0	0	5,770.00	SF	2.00	2.00	100	2016	2016	3	76	8,770	
75	0400	CONC CURB	0	0	0	0	144.00	LF	15.00	15.00	100	2016	2016	3	97	2,095	
76	0810	CONCRETE A	0	0	0	0	184.00	SF	6.50	6.50	100	2016	2016	3	95	1,136	
77	0810	CONCRETE A	0	0	51	5	255.00	SF	6.50	6.50	100	2016	2016	3	95	1,575	
78	0803	ASPHALT C	0	0	0	0	10,660.00	SF	2.00	2.00	100	2016	2016	3	76	16,203	
79	0812	CONCRETE C	0	0	0	0	2,273.00	SF	4.00	4.00	100	2016	2016	3	95	8,637	
80	0400	CONC CURB	0	0	0	0	310.00	LF	15.00	15.00	100	2016	2016	3	97	4,511	
81	0402	CONC BUMPE	0	0	0	0	15.00	UT	25.00	25.00	100	2016	2016	3	97	364	

TOTAL OB/XF 107,526

LAND DESCRIPTION

LN	USE CODE	CLS	LAND USE DESCRIPTION	CAP	RD	LOC ZONE	FRONT	DEPTH	TOT LND UTS	UNIT TYPE	DT	DPTH FACT	% COND	TOT ADJ	UNIT PRICE	ADJ UNIT PRICE	LAND VALUE	OTHER ADJUSTMENTS AND NOTES	YEAR	DENSITY	DECL	FRZ	YR	CONSRV

REVIEW DATE 04/15/2025 BY KW Total Acres: 0.00 Total Land Value: 2,572,688 Market: 0 Agricultural: 0 Common: 0 PRINTED 07/30/2025 BY SYS

PT JOHN LOW GRANT
SEC 37-2N-27E & PT JOHN D
VAUGHAN GRANT SEC 38-2N-27E IN

BW AMELIA LLC
C/O BEACHWOLD PARTNERS LP, 257 PARK AVENUE SOUTH
NEW YORK, NY 10010

2025

37-2N-27-0000-0001-0110

NASSAU COUNTY PROPERTY

BUILDING CHARACTERISTICS

ELEMENT	CD	CONSTRUCTION
Exterior Wall	31	HARDIE BRD 100
Roof Structur	04	WOOD TRUSS 100
Roof Cover	03	COMP SHNGL 100
Interior Wall	05	DRYWALL 100
Interior Floo	14	CARPET 80
Interior Floo	07	CORK/VTILE 20
Air Condition	03	CENTRAL 100
Heating Type	04	AIR DUCTED 100
Bedrooms		2 100
Bathrooms		2 100
Frame	02	WOOD FRAME 100
Story Height		10 100
RMS		0 100
Units		24 100
Quality	05	Quality Level 05
DOR CODE	0300	MULTI-FAMILY
MAP NUM		MKT AREA 04
NEIGHBORHOOD/LOC	4005.00	

AREA TYPE	TOTAL GROSS AREA	PCT OF BASE	YEAR	TOT ADJ AREA	SUBAREA MARKET VALUE
BAS	1,628	100	2015	1,628	323,031
BAS	1,628	100	2015	1,628	323,031
BAS	2,126	100	2015	2,126	421,846
BAS	2,126	100	2015	2,126	421,846
CAN	65	30	2015	20	3,969
CAN	65	30	2015	20	3,969
CAN	65	30	2015	20	3,969
CAN	75	30	2015	22	4,365
CAN	327	30	2015	98	19,446
CAN	327	30	2015	98	19,446
TOTALS	28,098			25,606	6,080,804

MARKET ADJUSTMENTS

TYPE	MDL	EFF. AREA	TOT ADJ PTS	EFF. BASE RATE	REPL. COST NEW	AYB	EYB	ECON	FNCT		NORM	% COND
0302	03	25,606	119.4720	206.69	5,292,504	2015	2015	0	0	0	4.00	96.00

9 APART/LUX – 0% - 0 Heated Area: 24116 HX Base Yr

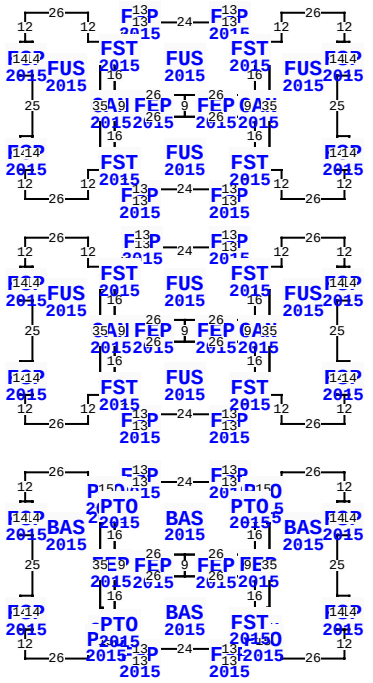

** This building has 68 Sub-Areas

86016 CHRISTIAN WAY, YULEE

BLD DATE	04/15/2025	KW	LGL DATE	
XF DATE	04/15/2025	KW	LAND DATE	04/28/2025 DC
INC DATE	04/15/2025	REA	AG DATE	

VALUATION SUMMARY

VALUATION BY	DIRECT_CAP
Tax Group: 4	Tax Dist:
BUILDING MARKET VALUE	48,881,070
TOTAL MARKET OB/XF VALUE	0
TOTAL LAND VALUE - MARKET	0
TOTAL MARKET VALUE	51,453,758
SOH/AGL Deduction	0
ASSESSED VALUE	51,453,758
TOTAL EXEMPTION VALUE	0
BASE TAXABLE VALUE	51,453,758
TOTAL JUST VALUE	51,453,758
NCON VALUE	0
INCOME VALUE	51,453,758
PREVIOUS YEAR MKT VALUE	51,431,000

PERMIT NUM	DESCRIPTION	AMT	ISSUED
E1528875	BLDG 6 APT TYPE 2	0	03/01/2015
E1528876	BLDG 8 APT TYPE 2	0	03/01/2015
P1517910	NEW CONSTR	0	01/01/2015
P1517911	NEW CONSTR	0	01/01/2015
P1517912	NEW CONSTR	0	01/01/2015
P1517913	NEW CONSTR	0	01/01/2015

SALES DATA

OFF RECORD Number	DATE	TYPE INST	Q / U	V / I	RSN CD	SALE PRICE
2204/0589	6/19/2018	SW	Q	I	01	51,300,000
GRANTOR: THE RESERVE AMELIA LL						
GRANTEE: BW AMELIA LLC						
1964/1815	2/23/2015	MS	U	I	11	0
GRANTOR: LFW RESERVE LLC						
GRANTEE: THE RESERVE AMELIA						

BUILDING NOTES

BUILDING DIMENSIONS

BAS=[YR=2015;ORIG=-10,100] E26 S7 S2 S3 E6 S4 S5 W1 S35 E1 S5 S4 W6 S3 S2 S7 W26 N12 E3 N14 N25 N14 W3 N12 $
BAS=[YR=2015;ORIG=122,100] W26 S7 S2 S3 W6 S4 S5 E1 S35 W1 S5 S4 E6 S3 S2 S7 E26 N12 W3 N14 N25 N14 E3 N12 $
FUS=[YR=2015;LABEL=3RD FLR;ORIG=-10,-90] E26 S12 E6 S9 W1 S35 E1 S9 W6 S12 W26 N12 E3 N14 N25 N14 W3 N12 $
FUS=[YR=2015;LABEL=2ND FLR;ORIG=-10,3] E26 S12 E6 S9 W1 S35 E1 S9 W6 S12 W26 N12 E3 N14 N25 N14 W3 N12 $
FUS=[YR=2015;LABEL=3RD FLR;ORIG=122,-90] W26 S12 W6 S9 E1 S35 W1 S9 E6 S12 E26 N12 W3 N14 N25 N14 E3 N12 $
FUS=[YR=2015;LABEL=2ND FLR;ORIG=122,3] W26 S12 W6 S9 E1 S35 W1 S9 E6 S12 E26 N12 W3 N14 N25 N14 E3 N12 $

EXTRA FEATURES

LN	OB/XF CODE	DESCRIPTION	BLD	CAP	L	W	UNITS	UT	Adj R	ADJ UNIT PRICE	ORIG COND	YEAR ON	YEAR ACTUAL	Q	% COND	OB/XF MKT VALUE	NOTES
82	0803	ASPHALT C	0	0	0	0	8,304.00	SF	2.00	2.00	100	2016	2016	3	76	12,622	
83	0812	CONCRETE C	0	0	0	0	1,340.00	SF	4.00	4.00	100	2016	2016	3	95	5,092	
84	0400	CONC CURB	0	0	0	0	124.00	LF	15.00	15.00	100	2016	2016	3	97	1,804	
85	0402	CONC BUMPE	0	0	0	0	4.00	UT	25.00	25.00	100	2016	2016	3	97	97	
86	0803	ASPHALT C	0	0	0	0	12,648.00	SF	2.00	2.00	100	2016	2016	3	76	19,225	
87	0812	CONCRETE C	0	0	0	0	1,860.00	SF	4.00	4.00	100	2016	2016	3	95	7,068	
88	0400	CONC CURB	0	0	0	0	121.00	LF	15.00	15.00	100	2016	2016	3	97	1,761	
89	0402	CONC BUMPE	0	0	0	0	6.00	UT	25.00	25.00	100	2016	2016	3	97	146	
90	0803	ASPHALT C	0	0	0	0	6,782.00	SF	2.00	2.00	100	2016	2016	3	76	10,309	
91	0810	CONCRETE A	0	0	51	5	255.00	SF	6.50	6.50	100	2016	2016	3	95	1,575	

TOTAL OB/XF 59,699

LAND DESCRIPTION

LN	USE CODE	CLS	LAND USE DESCRIPTION	CAP	RD	LOC ZONE	FRONT	DEPTH	TOT LND UTS	UNIT TYPE	DT	DPTH FACT	% COND	TOT ADJ	UNIT PRICE	ADJ UNIT PRICE	LAND VALUE	OTHER ADJUSTMENTS AND NOTES	YEAR	DENSITY	DECL	FRZ	YR	CONSRV

REVIEW DATE 04/15/2025 BY KW Total Acres: 0.00 Total Land Value: 2,572,688 Market: 0 Agricultural: 0 Common: 0 PRINTED 07/30/2025 BY SYS

PT JOHN LOW GRANT
SEC 37-2N-27E & PT JOHN D
VAUGHAN GRANT SEC 38-2N-27E IN

BW AMELIA LLC
C/O BEACHWOLD PARTNERS LP, 257 PARK AVENUE SOUTH
NEW YORK, NY 10010

2025

37-2N-27-0000-0001-0110

NASSAU COUNTY PROPERTY

BUILDING CHARACTERISTICS

ELEMENT	CD	CONSTRUCTION
Exterior Wall	31	HARDIE BRD 100
Roof Structur	04	WOOD TRUSS 100
Roof Cover	03	COMP SHNGL 100
Interior Wall	05	DRYWALL 100
Interior Floo	14	CARPET 80
Interior Floo	07	CORK/VTILE 20
Air Condition	03	CENTRAL 100
Heating Type	04	AIR DUCTED 100
Bedrooms		2 100
Bathrooms		2 100
Frame	02	WOOD FRAME 100
Story Height		10 100
RMS		0 100
Units		12 100
Quality	05	Quality Level 05

DOR CODE 0300 MULTI-FAMILY
MAP NUM | MKT AREA 04
NEIGHBORHOOD/LOC 4005.00

AREA TYPE	TOTAL GROSS AREA	PCT OF BASE	YEAR	TOT ADJ AREA	SUBAREA MARKET VALUE
BAS	2,294	100	2015	2,294	464,761
BAS	2,318	100	2015	2,318	469,623
CAN	684	30	2015	205	41,532
CAN	684	30	2015	205	41,532
CAN	746	30	2015	224	45,382
FSP	89	55	2015	49	9,927
FSP	89	55	2015	49	9,927
FSP	89	55	2015	49	9,927
FSP	89	55	2015	49	9,927
FSP	89	55	2015	49	9,927
TOTALS	17,098			15,124	3,064,098

MARKET ADJUSTMENTS

TYPE	MDL	EFF. AREA	TOT ADJ PTS	EFF. BASE RATE	REPL. COST NEW	AYB	EYB	ECON	FNCT		NORM	% COND
0302	03	15,124	121.9872	211.04	3,191,769	2015	2015	0	0	0	4.00	96.00

10 APART/LUX – 0% - 0 Heated Area: 13884 HX Base Yr

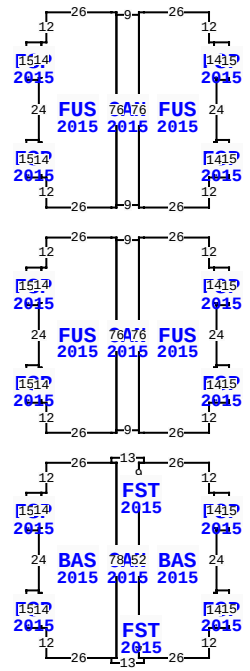

** This building has 23 Sub-Areas

86016 CHRISTIAN WAY, YULEE

BLD DATE	04/15/2025	KW	LGL DATE	
XF DATE	04/15/2025	KW	LAND DATE	04/28/2025 DC
INC DATE	04/15/2025	REA	AG DATE	

VALUATION SUMMARY

VALUATION BY	DIRECT_CAP
Tax Group: 4	Tax Dist:
BUILDING MARKET VALUE	48,881,070
TOTAL MARKET OB/XF VALUE	0
TOTAL LAND VALUE - MARKET	0
TOTAL MARKET VALUE	51,453,758
SOH/AGL Deduction	0
ASSESSED VALUE	51,453,758
TOTAL EXEMPTION VALUE	0
BASE TAXABLE VALUE	51,453,758
TOTAL JUST VALUE	51,453,758
NCON VALUE	0
INCOME VALUE	51,453,758
PREVIOUS YEAR MKT VALUE	51,431,000

PERMIT NUM	DESCRIPTION	AMT	ISSUED
P1517926	NEW CONSTR	0	01/01/2015
P1517927	NEW CONSTR	0	01/01/2015
P1517928	NEW CONSTR	0	01/01/2015
P1517929	NEW CONSTR	0	01/01/2015
P1517956	NEW CONSTR	0	01/01/2015
P1517957	NEW CONSTR	0	01/01/2015

SALES DATA

OFF RECORD Number	DATE	TYPE INST	Q / U	V / I	RSN CD	SALE PRICE
2204/0589	6/19/2018	SW	Q	I	01	51,300,000
GRANTOR: THE RESERVE AMELIA LL						
GRANTEE: BW AMELIA LLC						
1964/1815	2/23/2015	MS	U	I	11	0
GRANTOR: LFW RESERVE LLC						
GRANTEE: THE RESERVE AMELIA						

BUILDING NOTES

BUILDING DIMENSIONS

BAS=[YR=2015;ORIG=-47,-18] E26 E2 S78 W2 W26 N12 W2 N14 W1 N1 N24 N1 E1 N14 E2 N12 $
FUS=[YR=2015;LABEL=2ND FLR;ORIG=18,-108] W26 W2 S1 S76 S1 E2 E26 N12 E2 N14 E1 N1 N24 N1 W1 N14 W2 N12 $
FUS=[YR=2015;LABEL=3RD FLR;ORIG=-47,-198] E26 E2 S1 S76 S1 W2 W26 N12 W2 N14 W1 N1 N24 N1 E1 N14 E2 N12 $
FUS=[YR=2015;LABEL=2ND FLR;ORIG=-47,-108] E26 E2 S1 S76 S1 W2 W26 N12 W2 N14 W1 N1 N24 N1 E1 N14 E2 N12 $
FUS=[YR=2015;LABEL=3RD FLR;ORIG=18,-198] W26 W2 S1 S76 S1 E2 E26 N12 E2 N14 E1 N1 N24 N1 W1 N14 W2 N12 $
BAS=[YR=2015;ORIG=18,-18] W26 W2 S9 E3 S4 W3 S52 E3 S4 W3 S9 E2 E26 N12 E2 N14 E1 N1 N24 N1 W1 N14 W2 N12 $

EXTRA FEATURES

LN	OB/XF CODE	DESCRIPTION	BLD	CAP	L	W	UNITS	UT	Adj R	ADJ UNIT PRICE	ORIG COND	YEAR ON	YEAR ACTUAL	Q	% COND	OB/XF MKT VALUE	NOTES
92	0400	CONC CURB	0	0	0	0	207.00	LF	15.00	15.00	100	2016	2016	3	97	3,012	
93	0803	ASPHALT C	0	0	0	0	16,578.00	SF	2.00	2.00	100	2016	2016	3	76	25,199	
94	0810	CONCRETE A	0	0	28	5	140.00	SF	6.50	6.50	100	2016	2016	3	95	865	
95	0092	AUTO GATE	0	0	0	0	3.00	UT	3,500.00	3,500.00	100	2016	2016	3	70	7,350	
96	0400	CONC CURB	0	0	0	0	894.00	LF	15.00	15.00	100	2016	2016	3	97	13,008	
97	0819	CONC 12"	0	0	29	4	116.00	SF	9.50	9.50	100	2016	2016	3	95	1,047	
99	0463	FENCE GATE	0	0	0	0	5.00	UT	300.00	300.00	100	2016	2016	3	89	1,335	
100	0810	CONCRETE A	0	0	8	6	48.00	SF	6.50	6.50	100	2016	2016	3	95	296	
101	0423	CL FNC 5'	0	0	0	0	296.00	LF	6.85	6.85	100	2016	2016	3	89	1,805	
102	0424	CL FNC 6'	0	0	0	0	28.00	LF	20.00	20.00	100	2016	2016	3	89	498	

TOTAL OB/XF 54,415

LAND DESCRIPTION

LN	USE CODE	CLS	LAND USE DESCRIPTION	CAP	RD	LOC ZONE	FRONT	DEPTH	TOT LND UTS	UNIT TYPE	DT	DPTH FACT	% COND	TOT ADJ	UNIT PRICE	ADJ UNIT PRICE	LAND VALUE	OTHER ADJUSTMENTS AND NOTES	YEAR	DENSITY	DECL	FRZ	YR	CONSRV

REVIEW DATE 04/15/2025 BY KW Total Acres: 0.00 Total Land Value: 2,572,688 Market: 0 Agricultural: 0 Common: 0 PRINTED 07/30/2025 BY SYS

PT JOHN LOW GRANT
SEC 37-2N-27E & PT JOHN D
VAUGHAN GRANT SEC 38-2N-27E IN

BW AMELIA LLC
C/O BEACHWOLD PARTNERS LP, 257 PARK AVENUE SOUTH
NEW YORK, NY 10010

2025

37-2N-27-0000-0001-0110

NASSAU COUNTY PROPERTY

BUILDING CHARACTERISTICS

ELEMENT	CD	CONSTRUCTION
Exterior Wall	31	HARDIE BRD 100
Roof Structur	04	WOOD TRUSS 100
Roof Cover	03	COMP SHNGL 100
Interior Wall	05	DRYWALL 100
Interior Floo	14	CARPET 80
Interior Floo	07	CORK/VTILE 20
Air Condition	03	CENTRAL 100
Heating Type	04	AIR DUCTED 100
Bedrooms		2 100
Bathrooms		2 100
Frame	02	WOOD FRAME 100
Story Height		10 100
RMS		0 100
Units		24 100
Quality	05	Quality Level 05

DOR CODE 0300 MULTI-FAMILY
MAP NUM | MKT AREA 04
NEIGHBORHOOD/LOC 4005.00

AREA TYPE	TOTAL GROSS AREA	PCT OF BASE	YEAR	TOT ADJ AREA	SUBAREA MARKET VALUE
BAS	1,628	100	2015	1,628	324,714
BAS	1,628	100	2015	1,628	324,714
BAS	2,126	100	2015	2,126	424,043
BAS	2,126	100	2015	2,126	424,043
CAN	65	30	2015	20	3,989
CAN	65	30	2015	20	3,989
CAN	65	30	2015	20	3,989
CAN	75	30	2015	22	4,388
CAN	327	30	2015	98	19,547
CAN	327	30	2015	98	19,547
TOTALS	28,098			25,606	6,107,266

MARKET ADJUSTMENTS

TYPE	MDL	EFF. AREA	TOT ADJ PTS	EFF. BASE RATE	REPL. COST NEW	AYB	EYB	ECON	FNCT		NORM	% COND
0302	03	25,606	119.4720	206.69	5,292,504	2016	2016	0	0	0	3.50	96.50

11 APART/LUX – 0% - 0 Heated Area: 24116 HX Base Yr

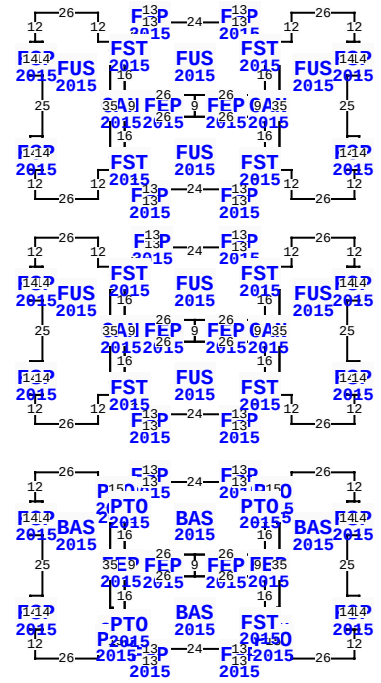

** This building has 68 Sub-Areas

86016 CHRISTIAN WAY, YULEE

BLD DATE	04/15/2025	KW	LGL DATE	
XF DATE	04/15/2025	KW	LAND DATE	04/28/2025 DC
INC DATE	04/15/2025	REA	AG DATE	

VALUATION SUMMARY

VALUATION BY	DIRECT_CAP
Tax Group: 4	Tax Dist:
BUILDING MARKET VALUE	48,881,070
TOTAL MARKET OB/XF VALUE	0
TOTAL LAND VALUE - MARKET	0
TOTAL MARKET VALUE	51,453,758
SOH/AGL Deduction	0
ASSESSED VALUE	51,453,758
TOTAL EXEMPTION VALUE	0
BASE TAXABLE VALUE	51,453,758
TOTAL JUST VALUE	51,453,758
NCON VALUE	0
INCOME VALUE	51,453,758
PREVIOUS YEAR MKT VALUE	51,431,000

PERMIT NUM	DESCRIPTION	AMT	ISSUED
P1517958	NEW CONSTR	0	01/01/2015
P1517959	NEW CONSTR	0	01/01/2015
P1518007	NEW CONSTR	0	01/01/2015
P1518008	NEW CONSTR	0	01/01/2015
P1518009	NEW CONSTR	0	01/01/2015
B1529754	BLDG 1 TYPE 2	2,791,975	01/01/2015

SALES DATA

OFF RECORD Number	DATE	TYPE INST	Q / U	V / I	RSN CD	SALE PRICE
2204/0589	6/19/2018	SW	Q	I	01	51,300,000
GRANTOR: THE RESERVE AMELIA LL						
GRANTEE: BW AMELIA LLC						
1964/1815	2/23/2015	MS	U	I	11	0
GRANTOR: LFW RESERVE LLC						
GRANTEE: THE RESERVE AMELIA						

BUILDING NOTES

BUILDING DIMENSIONS

BAS=[YR=2015;ORIG=-10,100] E26 S7 S2 S3 E6 S4 S5 W1 S35 E1 S5 S4 W6 S3 S2 S7 W26 N12 E3 N14 N25 N14 W3 N12 $
BAS=[YR=2015;ORIG=122,100] W26 S7 S2 S3 W6 S4 S5 E1 S35 W1 S5 S4 E6 S3 S2 S7 E26 N12 W3 N14 N25 N14 E3 N12 $
FUS=[YR=2015;LABEL=3RD FLR;ORIG=-10,-90] E26 S12 E6 S9 W1 S35 E1 S9 W6 S12 W26 N12 E3 N14 N25 N14 W3 N12 $
FUS=[YR=2015;LABEL=2ND FLR;ORIG=-10,3] E26 S12 E6 S9 W1 S35 E1 S9 W6 S12 W26 N12 E3 N14 N25 N14 W3 N12 $
FUS=[YR=2015;LABEL=3RD FLR;ORIG=122,-90] W26 S12 W6 S9 E1 S35 W1 S9 E6 S12 E26 N12 W3 N14 N25 N14 E3 N12 $
FUS=[YR=2015;LABEL=2ND FLR;ORIG=122,3] W26 S12 W6 S9 E1 S35 W1 S9 E6 S12 E26 N12 W3 N14 N25 N14 E3 N12 $

EXTRA FEATURES

LN	OB/XF CODE	DESCRIPTION	BLD	CAP	L	W	UNITS	UT	Adj R	ADJ UNIT PRICE	ORIG COND	YEAR ON	YEAR ACTUAL	Q	% COND	OB/XF MKT VALUE	NOTES
103	0463	FENCE GATE	0	0	0	0	1.00	UT	300.00	300.00	100	2016	2016	3	89	267	
104	0812	CONCRETE C	0	0	575	5	2,875.00	SF	4.00	4.00	100	2016	2016	3	95	10,925	
105	0972	ST LGHT UN	0	0	0	0	21.00	UT	2,530.00	2,530.00	100	2016	2016	3	89	47,286	
106	0462	ST/AL FNC	0	0	0	0	1,295.00	SF	10.00	10.00	100	2016	2016	3	78	10,101	
107	0423	CL FNC 5'	0	0	0	0	887.00	LF	6.85	6.85	100	2016	2016	3	89	5,408	
108	0975	ST LT/ARM	0	0	0	0	6.00	UT	500.00	500.00	100	2016	2016	3	89	2,670	
109	0966	FIRE SPRNK	5	0	0	0	22,524.00	SF	3.00	3.00	100	2016	2016	3	95	64,193	
110	0966	FIRE SPRNK	6	0	0	0	24,168.00	SF	3.00	3.00	100	2016	2016	3	95	68,879	
111	0966	FIRE SPRNK	7	0	0	0	24,168.00	SF	3.00	3.00	100	2016	2016	3	95	68,879	
112	0966	FIRE SPRNK	8	0	0	0	24,168.00	SF	3.00	3.00	100	2016	2016	3	95	68,879	

LAND DESCRIPTION

TOTAL OB/XF 347,487

LN	USE CODE	CLS	LAND USE DESCRIPTION	CAP	RD	LOC ZONE	FRONT	DEPTH	TOT LND UTS	UNIT TYPE	DT	DPTH FACT	% COND	TOT ADJ	UNIT PRICE	ADJ UNIT PRICE	LAND VALUE	OTHER ADJUSTMENTS AND NOTES	YEAR	DENSITY	DECL	FRZ	YR	CONSRV

REVIEW DATE 04/15/2025 BY KW Total Acres: 0.00 Total Land Value: 2,572,688 Market: 0 Agricultural: 0 Common: 0 PRINTED 07/30/2025 BY SYS

PT JOHN LOW GRANT
SEC 37-2N-27E & PT JOHN D
VAUGHAN GRANT SEC 38-2N-27E IN

BW AMELIA LLC
C/O BEACHWOLD PARTNERS LP, 257 PARK AVENUE SOUTH
NEW YORK, NY 10010

2025

37-2N-27-0000-0001-0110

NASSAU COUNTY PROPERTY

BUILDING CHARACTERISTICS

ELEMENT	CD	CONSTRUCTION
Exterior Wall	31	HARDIE BRD 100
Roof Structur	04	WOOD TRUSS 100
Roof Cover	03	COMP SHNGL 100
Interior Wall	05	DRYWALL 100
Interior Floo	14	CARPET 80
Interior Floo	07	CORK/VTILE 20
Air Condition	03	CENTRAL 100
Heating Type	04	AIR DUCTED 100
Bedrooms		2 100
Bathrooms		2 100
Frame	02	WOOD FRAME 100
Story Height		10 100
RMS		0 100
Units		24 100
Quality	05	Quality Level 05

DOR CODE 0300 MULTI-FAMILY
MAP NUM | MKT AREA 04
NEIGHBORHOOD/LOC 4005.00

AREA TYPE	TOTAL GROSS AREA	PCT OF BASE	YEAR	TOT ADJ AREA	SUBAREA MARKET VALUE
BAS	1,628	100	2015	1,628	324,714
BAS	1,628	100	2015	1,628	324,714
BAS	2,126	100	2015	2,126	424,043
BAS	2,126	100	2015	2,126	424,043
CAN	65	30	2015	20	3,989
CAN	65	30	2015	20	3,989
CAN	65	30	2015	20	3,989
CAN	75	30	2015	22	4,388
CAN	327	30	2015	98	19,547
CAN	327	30	2015	98	19,547
TOTALS	28,098			25,606	6,107,266

MARKET ADJUSTMENTS

TYPE	MDL	EFF. AREA	TOT ADJ PTS	EFF. BASE RATE	REPL. COST NEW	AYB	EYB	ECON	FNCT		NORM	% COND
0302	03	25,606	119.4720	206.69	5,292,504	2016	2016	0	0	0	3.50	96.50

12 APART/LUX – 0% - 0 Heated Area: 24116 HX Base Yr

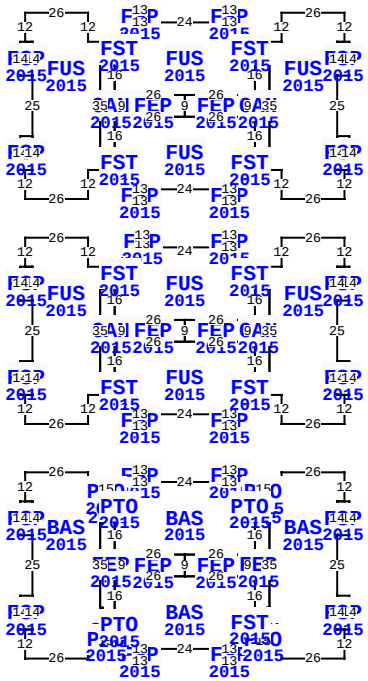

** This building has 68 Sub-Areas

86016 CHRISTIAN WAY, YULEE

BLD DATE	04/15/2025	KW	LGL DATE	
XF DATE	04/15/2025	KW	LAND DATE	04/28/2025 DC
INC DATE	04/15/2025	REA	AG DATE	

VALUATION SUMMARY

VALUATION BY	DIRECT_CAP
Tax Group: 4	Tax Dist:
BUILDING MARKET VALUE	48,881,070
TOTAL MARKET OB/XF VALUE	0
TOTAL LAND VALUE - MARKET	0
TOTAL MARKET VALUE	51,453,758
SOH/AGL Deduction	0
ASSESSED VALUE	51,453,758
TOTAL EXEMPTION VALUE	0
BASE TAXABLE VALUE	51,453,758
TOTAL JUST VALUE	51,453,758
NCON VALUE	0
INCOME VALUE	51,453,758
PREVIOUS YEAR MKT VALUE	51,431,000

PERMIT NUM	DESCRIPTION	AMT	ISSUED
B1529755	COMM SWIM POOL	290,000	01/01/2015
B1529756	BLDG 2 TYPE 3	3,073,331	01/01/2015
B1529757	BLDG 3 TYPE 2	2,791,975	01/01/2015
B1529758	BLDG 4 TYPE 1	2,605,333	01/01/2015
B1529759	BLDG 5 TYPE 1	2,605,333	01/01/2015
B1529760	BLDG 6 TYPE 2	2,791,975	01/01/2015

SALES DATA

OFF RECORD Number	DATE	TYPE INST	Q / U	V / I	RSN CD	SALE PRICE
2204/0589	6/19/2018	SW	Q	I	01	51,300,000
GRANTOR: THE RESERVE AMELIA LL						
GRANTEE: BW AMELIA LLC						
1964/1815	2/23/2015	MS	U	I	11	0
GRANTOR: LFW RESERVE LLC						
GRANTEE: THE RESERVE AMELIA						

BUILDING NOTES

EXTRA FEATURES

LN	OB/XF CODE	DESCRIPTION	BLD	CAP	L	W	UNITS	UT	Adj R	ADJ UNIT PRICE	ORIG COND	YEAR ON	YEAR ACTUAL	Q	% COND	OB/XF MKT VALUE	NOTES
113	0966	FIRE SPRNK	11	0	0	0	22,524.00	SF	3.00	3.00	100	2016	2016	3	95	64,193	
114	0966	FIRE SPRNK	12	0	0	0	22,524.00	SF	3.00	3.00	100	2016	2016	3	95	64,193	
115	0966	FIRE SPRNK	13	0	0	0	22,524.00	SF	3.00	3.00	100	2016	2016	3	95	64,193	
116	0423	CL FNC 5'	0	0	0	0	679.00	LF	6.85	6.85	100	2016	2016	3	89	4,140	
117	0475	VF 4 SBPL	0	0	0	0	53.00	LF	14.00	14.00	100	2021	2021	3	96	712	
118	0470	VNYL GATE	0	0	0	0	1.00	UT	300.00	300.00	100	2021	2021	3	96	288	

BUILDING DIMENSIONS

BAS=[YR=2015;ORIG=-10,100] E26 S7 S2 S3 E6 S4 S5 W1 S35 E1 S5 S4 W6 S3 S2 S7 W26 N12 E3 N14 N25 N14 W3 N12 $
BAS=[YR=2015;ORIG=122,100] W26 S7 S2 S3 W6 S4 S5 E1 S35 W1 S5 S4 E6 S3 S2 S7 E26 N12 W3 N14 N25 N14 E3 N12 $
FUS=[YR=2015;LABEL=3RD FLR;ORIG=-10,-90] E26 S12 E6 S9 W1 S35 E1 S9 W6 S12 W26 N12 E3 N14 N25 N14 W3 N12 $
FUS=[YR=2015;LABEL=2ND FLR;ORIG=-10,3] E26 S12 E6 S9 W1 S35 E1 S9 W6 S12 W26 N12 E3 N14 N25 N14 W3 N12 $
FUS=[YR=2015;LABEL=3RD FLR;ORIG=122,-90] W26 S12 W6 S9 E1 S35 W1 S9 E6 S12 E26 N12 W3 N14 N25 N14 E3 N12 $
FUS=[YR=2015;LABEL=2ND FLR;ORIG=122,3] W26 S12 W6 S9 E1 S35 W1 S9 E6 S12 E26 N12 W3 N14 N25 N14 E3 N12 $

LAND DESCRIPTION

TOTAL OB/XF 197,719

LN	USE CODE	CLS	LAND USE DESCRIPTION	CAP	RD	LOC ZONE	FRONT	DEPTH	TOT LND UTS	UNIT TYPE	DT	DPTH FACT	% COND	TOT ADJ	UNIT PRICE	ADJ UNIT PRICE	LAND VALUE	OTHER ADJUSTMENTS AND NOTES	YEAR	DENSITY	DECL	FRZ	YR	CONSRV

REVIEW DATE 04/15/2025 BY KW Total Acres: 0.00 Total Land Value: 2,572,688 Market: 0 Agricultural: 0 Common: 0 PRINTED 07/30/2025 BY SYS

PT JOHN LOW GRANT
SEC 37-2N-27E & PT JOHN D
VAUGHAN GRANT SEC 38-2N-27E IN

BW AMELIA LLC
C/O BEACHWOLD PARTNERS LP, 257 PARK AVENUE SOUTH
NEW YORK, NY 10010

2025

37-2N-27-0000-0001-0110

NASSAU COUNTY PROPERTY

BUILDING CHARACTERISTICS

ELEMENT	CD	CONSTRUCTION
Exterior Wall	31	HARDIE BRD 100
Roof Structur	04	WOOD TRUSS 100
Roof Cover	03	COMP SHNGL 100
Interior Wall	05	DRYWALL 100
Interior Floo	14	CARPET 80
Interior Floo	07	CORK/VTILE 20
Air Condition	03	CENTRAL 100
Heating Type	04	AIR DUCTED 100
Bedrooms		2 100
Bathrooms		2 100
Frame	02	WOOD FRAME 100
Story Height		10 100
RMS		0 100
Units		24 100
Quality	05	Quality Level 05

DOR CODE 0300 MULTI-FAMILY

MAP NUM | MKT AREA 04

NEIGHBORHOOD/LOC 4005.00

AREA TYPE	TOTAL GROSS AREA	PCT OF BASE	YEAR	TOT ADJ AREA	SUBAREA MARKET VALUE
BAS	1,628	100	2015	1,628	324,714
BAS	1,628	100	2015	1,628	324,714
BAS	2,126	100	2015	2,126	424,043
BAS	2,126	100	2015	2,126	424,043
CAN	65	30	2015	20	3,989
CAN	65	30	2015	20	3,989
CAN	65	30	2015	20	3,989
CAN	75	30	2015	22	4,388
CAN	327	30	2015	98	19,547
CAN	327	30	2015	98	19,547
TOTALS	28,098			25,606	6,107,266

MARKET ADJUSTMENTS

TYPE	MDL	EFF. AREA	TOT ADJ PTS	EFF. BASE RATE	REPL. COST NEW	AYB	EYB	ECON	FNCT		NORM	% COND
0302	03	25,606	119.4720	206.69	5,292,504	2016	2016	0	0	0	3.50	96.50

13 APART/LUX – 0% - 0 Heated Area: 24116 HX Base Yr

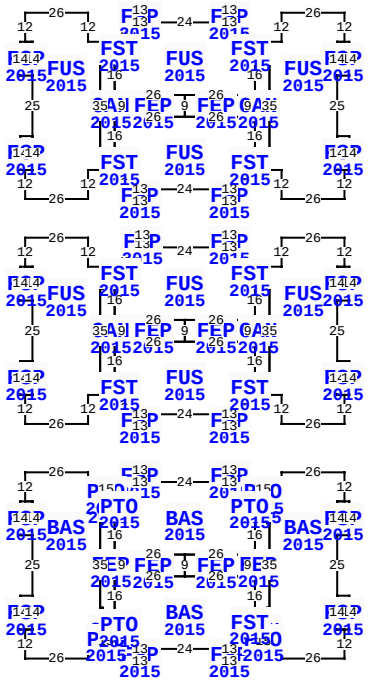

** This building has 68 Sub-Areas

86016 CHRISTIAN WAY, YULEE

BLD DATE	04/15/2025	KW	LGL DATE	
XF DATE	04/15/2025	KW	LAND DATE	04/28/2025 DC
INC DATE	04/15/2025	REA	AG DATE	

VALUATION SUMMARY

VALUATION BY	DIRECT_CAP
Tax Group: 4	Tax Dist:
BUILDING MARKET VALUE	48,881,070
TOTAL MARKET OB/XF VALUE	0
TOTAL LAND VALUE - MARKET	0
TOTAL MARKET VALUE	51,453,758
SOH/AGL Deduction	0
ASSESSED VALUE	51,453,758
TOTAL EXEMPTION VALUE	0
BASE TAXABLE VALUE	51,453,758
TOTAL JUST VALUE	51,453,758
NCON VALUE	0
INCOME VALUE	51,453,758
PREVIOUS YEAR MKT VALUE	51,431,000

PERMIT NUM	DESCRIPTION	AMT	ISSUED
B1529761	BLDG 7 TYPE 2	2,791,975	01/01/2015
B1529762	BLDG 8 TYPE 2	2,791,975	01/01/2015
B1529763	BLDG 9 TYPE 1	2,605,333	01/01/2015
B1529764	BLDG 10 TYPE 4	1,539,426	01/01/2015
B1529765	BLDG 11 TYPE 1	2,605,333	01/01/2015
B1529766	BLDG 12 TYPE 1	2,605,333	01/01/2015

SALES DATA

OFF RECORD Number	DATE	TYPE INST	Q / U	V / I	RSN CD	SALE PRICE
2204/0589	6/19/2018	SW	Q	I	01	51,300,000
GRANTOR: THE RESERVE AMELIA LL						
GRANTEE: BW AMELIA LLC						
1964/1815	2/23/2015	MS	U	I	11	0
GRANTOR: LFW RESERVE LLC						
GRANTEE: THE RESERVE AMELIA						

BUILDING NOTES

BUILDING DIMENSIONS

BAS=[YR=2015;ORIG=-10,100] E26 S7 S2 S3 E6 S4 S5 W1 S35 E1 S5 S4 W6 S3 S2 S7 W26 N12 E3 N14 N25 N14 W3 N12 $
BAS=[YR=2015;ORIG=122,100] W26 S7 S2 S3 W6 S4 S5 E1 S35 W1 S5 S4 E6 S3 S2 S7 E26 N12 W3 N14 N25 N14 E3 N12 $
FUS=[YR=2015;LABEL=3RD FLR;ORIG=-10,-90] E26 S12 E6 S9 W1 S35 E1 S9 W6 S12 W26 N12 E3 N14 N25 N14 W3 N12 $
FUS=[YR=2015;LABEL=2ND FLR;ORIG=-10,3] E26 S12 E6 S9 W1 S35 E1 S9 W6 S12 W26 N12 E3 N14 N25 N14 W3 N12 $
FUS=[YR=2015;LABEL=3RD FLR;ORIG=122,-90] W26 S12 W6 S9 E1 S35 W1 S9 E6 S12 E26 N12 W3 N14 N25 N14 E3 N12 $
FUS=[YR=2015;LABEL=2ND FLR;ORIG=122,3] W26 S12 W6 S9 E1 S35 W1 S9 E6 S12 E26 N12 W3 N14 N25 N14 E3 N12 $

EXTRA FEATURES

LN	OB/XF CODE	DESCRIPTION	BLD	CAP	L	W	UNITS	UT	Adj R	ADJ UNIT PRICE	ORIG COND	YEAR ON	YEAR ACTUAL	Q	% COND	OB/XF MKT VALUE	NOTES

LAND DESCRIPTION

TOTAL OB/XF 0

LN	USE CODE	CLS	LAND USE DESCRIPTION	CAP	RD	LOC ZONE	FRONT	DEPTH	TOT LND UTS	UNIT TYPE	DT	DPTH FACT	% COND	TOT ADJ	UNIT PRICE	ADJ UNIT PRICE	LAND VALUE	OTHER ADJUSTMENTS AND NOTES	YEAR	DENSITY	DECL	FRZ	YR	CONSRV

REVIEW DATE 04/15/2025 BY KW Total Acres: 0.00 Total Land Value: 2,572,688 Market: 0 Agricultural: 0 Common: 0 PRINTED 07/30/2025 BY SYS

PT JOHN LOW GRANT
SEC 37-2N-27E & PT JOHN D
VAUGHAN GRANT SEC 38-2N-27E IN

BW AMELIA LLC
C/O BEACHWOLD PARTNERS LP, 257 PARK AVENUE SOUTH
NEW YORK, NY 10010

2025

37-2N-27-0000-0001-0110

NASSAU COUNTY PROPERTY

BUILDING CHARACTERISTICS

ELEMENT	CD	CONSTRUCTION
Exterior Wall	31	HARDIE BRD 100
Roof Structur	04	WOOD TRUSS 100
Roof Cover	03	COMP SHNGL 100
Interior Wall	05	DRYWALL 100
Interior Floo	11	CLAY TILE 80
Interior Floo	14	CARPET 20
Ceiling	02	F.NOT SUS 100
Air Condition	03	CENTRAL 100
Heating Type	04	AIR DUCTED 100
Fixtures		22 100
Frame	02	WOOD FRAME 100
Story Height		13 100
RMS		10 100
Stories	1.	1. 100
Units		0 100
Occupancy	00	NONE 100
Quality	05	Quality Level 05
DOR CODE	0300	MULTI-FAMILY
MAP NUM		MKT AREA 04
NEIGHBORHOOD/LOC	4005.00	

AREA TYPE	TOTAL GROSS AREA	PCT OF BASE	YEAR	TOT ADJ AREA	SUBAREA MARKET VALUE
BAS	5,058	100	2015	5,058	804,780
CAN	252	30	2015	76	12,092
CAN	396	30	2015	119	18,934
CAN	1,066	30	2015	320	50,916
TOTALS	6,772			5,573	886,722

MARKET ADJUSTMENTS

TYPE	MDL	EFF. AREA	TOT ADJ PTS	EFF. BASE RATE	REPL. COST NEW	AYB	EYB	ECON	FNCT		NORM	% COND
0303	04	5,573	152.0575	165.74	923,669	2015	2015	0	0	0	4.00	96.00

14 CLUB HOUSE – 0% - 0 Heated Area: 5058 HX Base Yr

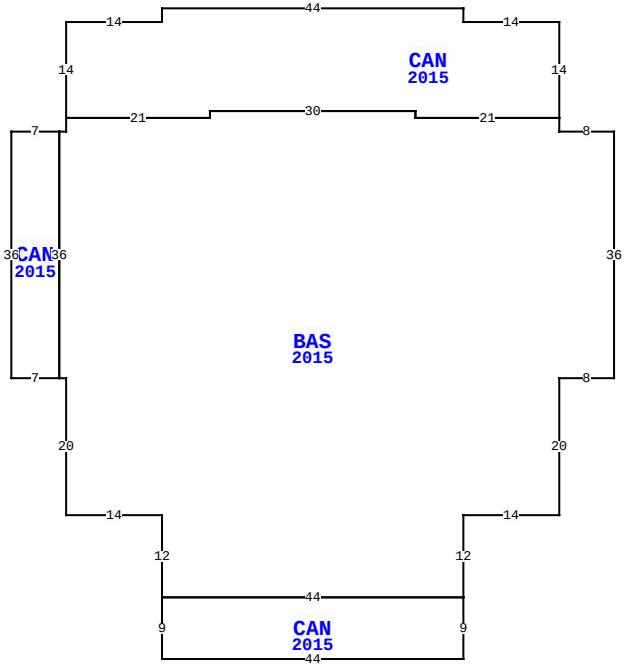

86016 CHRISTIAN WAY, YULEE

BLD DATE	04/15/2025	KW	LGL DATE	
XF DATE	04/15/2025	KW	LAND DATE	04/28/2025 DC
INC DATE	04/15/2025	REA	AG DATE	

VALUATION SUMMARY

VALUATION BY	DIRECT_CAP
Tax Group: 4	Tax Dist:
BUILDING MARKET VALUE	48,881,070
TOTAL MARKET OB/XF VALUE	0
TOTAL LAND VALUE - MARKET	0
TOTAL MARKET VALUE	51,453,758
SOH/AGL Deduction	0
ASSESSED VALUE	51,453,758
TOTAL EXEMPTION VALUE	0
BASE TAXABLE VALUE	51,453,758
TOTAL JUST VALUE	51,453,758
NCON VALUE	0
INCOME VALUE	51,453,758
PREVIOUS YEAR MKT VALUE	51,431,000

PERMIT NUM	DESCRIPTION	AMT	ISSUED
B1529767	BLDG 13 TYPE 1	2,605,333	01/01/2015
B1529768	BLDG 15 GARAGE 5A	172,329	01/01/2015
B1529769	BLDG 16 GARAGE 5C	223,380	01/01/2015
B1529770	BLDG 17 GARAGE 5D	161,004	01/01/2015
B1529771	BLDG 18 GARAGE 5B	221,364	01/01/2015
B1529772	BLDG 19 GARAGE 5B	221,364	01/01/2015

SALES DATA

OFF RECORD Number	DATE	TYPE INST	Q / U	V / I	RSN CD	SALE PRICE
2204/0589	6/19/2018	SW	Q	I	01	51,300,000
GRANTOR: THE RESERVE AMELIA LL						
GRANTEE: BW AMELIA LLC						
1964/1815	2/23/2015	MS	U	I	11	0
GRANTOR: LFW RESERVE LLC						
GRANTEE: THE RESERVE AMELIA						

BUILDING NOTES

BUILDING DIMENSIONS

BAS=[YR=2015] W8 N2 CAN=[YR=2015] N14 W14 N2 W44 S2 W14 S14 E21 N1 E30 S1 E21$ W21 N1 W30 S1 W21 S2 W1 CAN=[YR=2015] W7 S36 E7 N36$ S36 E1 S20 E14 S12 CAN=[YR=2015] S9 E44 N9 W44$ E44 N12 E14 N20 E8 N36$.

EXTRA FEATURES

L N	OB/XF CODE	DESCRIPTION	BLD	CAP	L	W	UNITS	UT	Adj R	ADJ UNIT PRICE	ORIG COND	YEAR ON	YEAR ACTUAL	Q	% COND	OB/XF MKT VALUE	NOTES

LAND DESCRIPTION

TOTAL OB/XF 0

L N	USE CODE	CLS	LAND USE DESCRIPTION	CAP	R D	LOC ZONE	FRONT	DEPTH	TOT LND UTS	UNIT TYPE	D T	DPTH FACT	% COND	TOT ADJ	UNIT PRICE	ADJ UNIT PRICE	LAND VALUE	OTHER ADJUSTMENTS AND NOTES	YEAR	DENSITY	DECL	FRZ	YR	CONSRV

REVIEW DATE 04/15/2025 BY KW Total Acres: 0.00 Total Land Value: 2,572,688 Market: 0 Agricultural: 0 Common: 0 PRINTED 07/30/2025 BY SYS

PT JOHN LOW GRANT
SEC 37-2N-27E & PT JOHN D
VAUGHAN GRANT SEC 38-2N-27E IN

BW AMELIA LLC
C/O BEACHWOLD PARTNERS LP, 257 PARK AVENUE SOUTH
NEW YORK, NY 10010

2025

37-2N-27-0000-0001-0110

NASSAU COUNTY PROPERTY

BUILDING CHARACTERISTICS

ELEMENT	CD	CONSTRUCTION
Exterior Wall	31	HARDIE BRD 100
Roof Structur	04	WOOD TRUSS 100
Roof Cover	03	COMP SHNGL 100
Interior Wall	05	DRYWALL 100
Interior Floo	03	CONC FINSH 100
Ceiling	02	F.NOT SUS 100
Air Condition	01	NONE 100
Heating Type	01	NONE 100
Fixtures		0 100
Frame	02	WOOD FRAME 100
Story Height		11 100
RMS		0 100
Stories	1.	1. 100
Units		12 100
Occupancy	00	NONE 100
Quality	05	Quality Level 05

DOR CODE	0300	MULTI-FAMILY	
MAP NUM		MKT AREA	04
NEIGHBORHOOD/LOC	4005.00		

AREA TYPE	TOTAL GROSS AREA	PCT OF BASE	YEAR	TOT ADJ AREA	SUBAREA MARKET VALUE
BAS	4,080	100	2016	4,080	127,644
TOTALS	4,080			4,080	127,644

MARKET ADJUSTMENTS

TYPE	MDL	EFF. AREA	TOT ADJ PTS	EFF. BASE RATE	REPL. COST NEW	AYB	EYB	ECON	FNCT		NORM	% COND
0304	04	4,080	100.5362	32.42	132,274	2016	2016	0	0	0	3.50	96.50

15 APARTS/GAR – 0% - 0 Heated Area: 4080 HX Base Yr

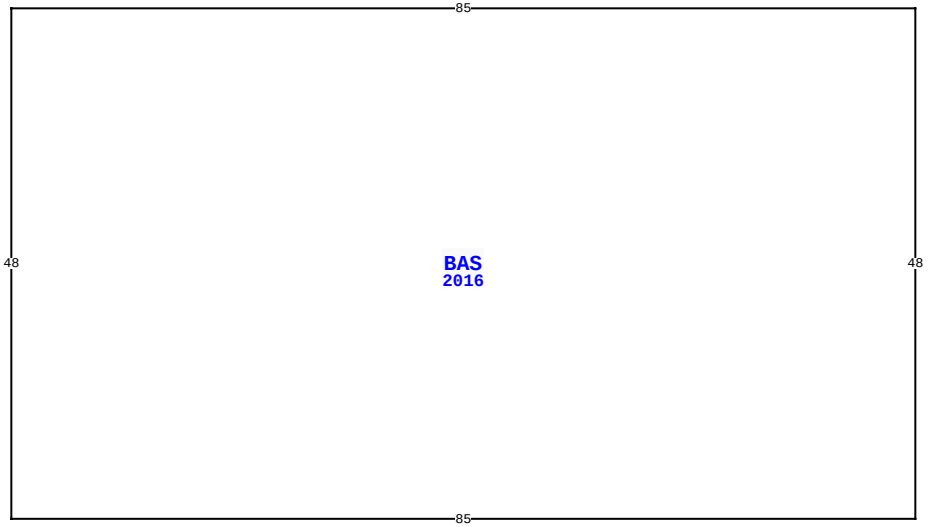

86016 CHRISTIAN WAY, YULEE

BLD DATE	04/15/2025	KW	LGL DATE	
XF DATE	04/15/2025	KW	LAND DATE	04/28/2025 DC
INC DATE	04/15/2025	REA	AG DATE	

VALUATION SUMMARY

VALUATION BY	DIRECT_CAP
Tax Group: 4	Tax Dist:
BUILDING MARKET VALUE	48,881,070
TOTAL MARKET OB/XF VALUE	0
TOTAL LAND VALUE - MARKET	0
TOTAL MARKET VALUE	51,453,758
SOH/AGL Deduction	0
ASSESSED VALUE	51,453,758
TOTAL EXEMPTION VALUE	0
BASE TAXABLE VALUE	51,453,758
TOTAL JUST VALUE	51,453,758
NCON VALUE	0
INCOME VALUE	51,453,758
PREVIOUS YEAR MKT VALUE	51,431,000

PERMIT NUM	DESCRIPTION	AMT	ISSUED
B1529773	BLDG 21 MAIL PAVI	19,091	01/01/2015
B1529774	BLDG 14 CLUBHOUSE	800,937	01/01/2015
B1529775	BLDG 20 POOL BLDG	22,737	01/01/2015
E1528651	RESERVE AT AMELIA	0	01/01/2015
E1528652	RESERVE AT AMELIA	0	01/01/2015
E1528653	RESERVE AT AMELIA	0	01/01/2015

SALES DATA

OFF RECORD Number	DATE	TYPE INST	Q / U	V / I	RSN CD	SALE PRICE
2204/0589	6/19/2018	SW	Q	I	01	51,300,000
GRANTOR: THE RESERVE AMELIA LL						
GRANTEE: BW AMELIA LLC						
1964/1815	2/23/2015	MS	U	I	11	0
GRANTOR: LFW RESERVE LLC						
GRANTEE: THE RESERVE AMELIA						

BUILDING NOTES

BUILDING DIMENSIONS

BAS=[YR=2016] W85 S48 E85 N48$.

EXTRA FEATURES

L N	OB/XF CODE	DESCRIPTION	BLD	CAP	L	W	UNITS	UT	Adj R	ADJ UNIT PRICE	ORIG COND	YEAR ON	YEAR ACTUAL	Q	% COND	OB/XF MKT VALUE	NOTES

LAND DESCRIPTION

TOTAL OB/XF 0

L N	USE CODE	CLS	LAND USE DESCRIPTION	CAP	R D	LOC ZONE	FRONT	DEPTH	TOT LND UTS	UNIT TYPE	D T	DPTH FACT	% COND	TOT ADJ	UNIT PRICE	ADJ UNIT PRICE	LAND VALUE	OTHER ADJUSTMENTS AND NOTES	YEAR	DENSITY	DECL	FRZ	YR	CONSRV

REVIEW DATE 04/15/2025 BY KW Total Acres: 0.00 Total Land Value: 2,572,688 Market: 0 Agricultural: 0 Common: 0 PRINTED 07/30/2025 BY SYS

PT JOHN LOW GRANT
SEC 37-2N-27E & PT JOHN D
VAUGHAN GRANT SEC 38-2N-27E IN

BW AMELIA LLC
C/O BEACHWOLD PARTNERS LP, 257 PARK AVENUE SOUTH
NEW YORK, NY 10010

2025

37-2N-27-0000-0001-0110

NASSAU COUNTY PROPERTY

BUILDING CHARACTERISTICS

ELEMENT	CD	CONSTRUCTION
Exterior Wall	31	HARDIE BRD 100
Roof Structur	04	WOOD TRUSS 100
Roof Cover	03	COMP SHNGL 100
Interior Wall	05	DRYWALL 100
Interior Floo	03	CONC FINSH 100
Ceiling	02	F.NOT SUS 100
Air Condition	01	NONE 100
Heating Type	01	NONE 100
Fixtures		0 100
Frame	02	WOOD FRAME 100
Story Height		11 100
RMS		0 100
Stories	1.	1. 100
Units		16 100
Occupancy	00	NONE 100
Quality	05	Quality Level 05

DOR CODE	0300	MULTI-FAMILY	
MAP NUM		MKT AREA	04
NEIGHBORHOOD/LOC	4005.00		

AREA TYPE	TOTAL GROSS AREA	PCT OF BASE	YEAR	TOT ADJ AREA	SUBAREA MARKET VALUE
BAS	5,184	100	2016	5,184	160,632
TOTALS	5,184			5,184	160,632

MARKET ADJUSTMENTS

TYPE	MDL	EFF. AREA	TOT ADJ PTS	EFF. BASE RATE	REPL. COST NEW	AYB	EYB	ECON	FNCT		NORM	% COND
0304	04	5,184	99.5602	32.11	166,458	2016	2016	0	0	0	3.50	96.50

16 APART/GAR – 0% - 0 Heated Area: 5184 HX Base Yr

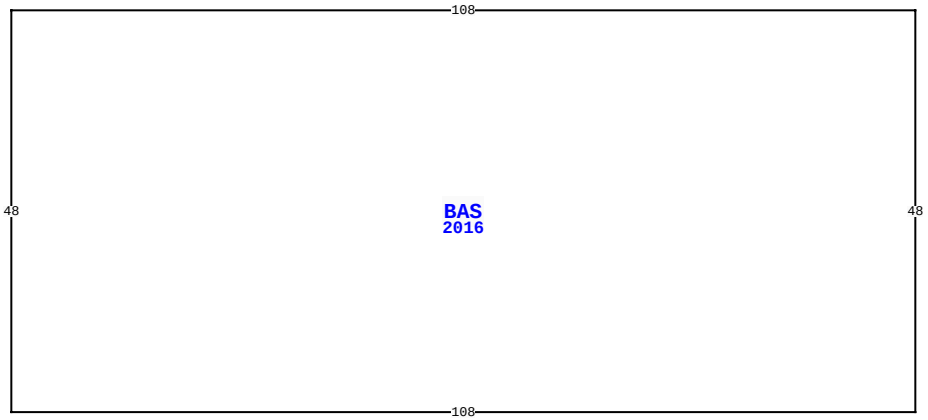

86016 CHRISTIAN WAY, YULEE

BLD DATE	04/15/2025	KW	LGL DATE		
XF DATE	04/15/2025	KW	LAND DATE	04/28/2025	DC
INC DATE	04/15/2025	REA	AG DATE		

NASSAU COUNTY PROPERTY — VALUATION SUMMARY

VALUATION BY	DIRECT_CAP
Tax Group: 4	Tax Dist:
BUILDING MARKET VALUE	48,881,070
TOTAL MARKET OB/XF VALUE	0
TOTAL LAND VALUE - MARKET	0
TOTAL MARKET VALUE	51,453,758
SOH/AGL Deduction	0
ASSESSED VALUE	51,453,758
TOTAL EXEMPTION VALUE	0
BASE TAXABLE VALUE	51,453,758
TOTAL JUST VALUE	51,453,758
NCON VALUE	0
INCOME VALUE	51,453,758
PREVIOUS YEAR MKT VALUE	51,431,000

PERMIT NUM	DESCRIPTION	AMT	ISSUED
E1528654	RESERVE AT AMELIA	0	01/01/2015
E1528655	RESERVE AT AMELIA	0	01/01/2015
B1429608	RESERVE AT AMELIA	2,791,975	11/01/2014
IND089	WTRMGMT	0	06/27/2014

SALES DATA

OFF RECORD Number	DATE	TYPE INST	Q / U	V / I	RSN CD	SALE PRICE
2204/0589	6/19/2018	SW	Q	I	01	51,300,000
GRANTOR: THE RESERVE AMELIA LL						
GRANTEE: BW AMELIA LLC						
1964/1815	2/23/2015	MS	U	I	11	0
GRANTOR: LFW RESERVE LLC						
GRANTEE: THE RESERVE AMELIA						

BUILDING NOTES

BUILDING DIMENSIONS

BAS=[YR=2016] W108 S48 E108 N48$.

EXTRA FEATURES

L N	OB/XF CODE	DESCRIPTION	BLD	CAP	L	W	UNITS	UT	Adj R	ADJ UNIT PRICE	ORIG COND	YEAR ON	YEAR ACTUAL	Q	% COND	OB/XF MKT VALUE	NOTES

LAND DESCRIPTION

TOTAL OB/XF 0

L N	USE CODE	CLS	LAND USE DESCRIPTION	CAP	R D	LOC ZONE	FRONT	DEPTH	TOT LND UTS	UNIT TYPE	D T	DPTH FACT	% COND	TOT ADJ	UNIT PRICE	ADJ UNIT PRICE	LAND VALUE	OTHER ADJUSTMENTS AND NOTES	YEAR	DENSITY	DECL	FRZ	YR	CONSRV

REVIEW DATE 04/15/2025 BY KW Total Acres: 0.00 Total Land Value: 2,572,688 Market: 0 Agricultural: 0 Common: 0 PRINTED 07/30/2025 BY SYS

PT JOHN LOW GRANT
SEC 37-2N-27E & PT JOHN D
VAUGHAN GRANT SEC 38-2N-27E IN

BW AMELIA LLC
C/O BEACHWOLD PARTNERS LP, 257 PARK AVENUE SOUTH
NEW YORK, NY 10010

2025

37-2N-27-0000-0001-0110

NASSAU COUNTY PROPERTY

BUILDING CHARACTERISTICS

ELEMENT	CD	CONSTRUCTION
Exterior Wall	31	HARDIE BRD 100
Roof Structur	04	WOOD TRUSS 100
Roof Cover	03	COMP SHNGL 100
Interior Wall	05	DRYWALL 100
Interior Floo	03	CONC FINSH 100
Ceiling	02	F.NOT SUS 100
Air Condition	01	NONE 100
Heating Type	01	NONE 100
Fixtures		0 100
Frame	02	WOOD FRAME 100
Story Height		11 100
RMS		0 100
Stories	1.	1. 100
Units		10 100
Occupancy	00	NONE 100
Quality	05	Quality Level 05

DOR CODE	0300	MULTI-FAMILY	
MAP NUM		MKT AREA	04
NEIGHBORHOOD/LOC	4005.00		

AREA TYPE	TOTAL GROSS AREA	PCT OF BASE	YEAR	TOT ADJ AREA	SUBAREA MARKET VALUE
BAS	3,480	100	2016	3,480	108,873
FCP	360	30	2016	108	3,378
TOTALS	3,840			3,588	112,252

MARKET ADJUSTMENTS

TYPE	MDL	EFF. AREA	TOT ADJ PTS	EFF. BASE RATE	REPL. COST NEW	AYB	EYB	ECON	FNCT		NORM	% COND
0304	04	3,588	100.5362	32.42	116,323	2016	2016	0	0	0	3.50	96.50

17 APARTS/GAR – 0% - 0 Heated Area: 3480 HX Base Yr

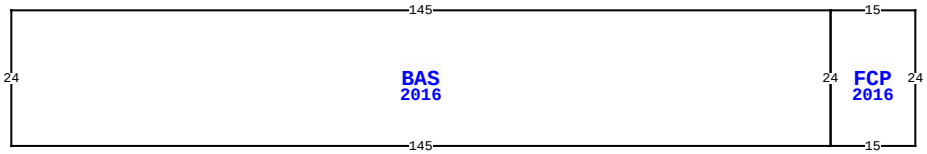

86016 CHRISTIAN WAY, YULEE

BLD DATE	04/15/2025	KW	LGL DATE	
XF DATE	04/15/2025	KW	LAND DATE	04/28/2025 DC
INC DATE	04/15/2025	REA	AG DATE	

VALUATION SUMMARY

VALUATION BY	DIRECT_CAP
Tax Group: 4	Tax Dist:
BUILDING MARKET VALUE	48,881,070
TOTAL MARKET OB/XF VALUE	0
TOTAL LAND VALUE - MARKET	0
TOTAL MARKET VALUE	51,453,758
SOH/AGL Deduction	0
ASSESSED VALUE	51,453,758
TOTAL EXEMPTION VALUE	0
BASE TAXABLE VALUE	51,453,758
TOTAL JUST VALUE	51,453,758
NCON VALUE	0
INCOME VALUE	51,453,758
PREVIOUS YEAR MKT VALUE	51,431,000

PERMIT NUM	DESCRIPTION	AMT	ISSUED

SALES DATA

OFF RECORD Number	DATE	TYPE INST	Q / U	V / I	RSN CD	SALE PRICE
2204/0589	6/19/2018	SW	Q	I	01	51,300,000
GRANTOR: THE RESERVE AMELIA LL						
GRANTEE: BW AMELIA LLC						
1964/1815	2/23/2015	MS	U	I	11	0
GRANTOR: LFW RESERVE LLC						
GRANTEE: THE RESERVE AMELIA						

BUILDING NOTES

BUILDING DIMENSIONS

FCP=[YR=2016] W15 BAS=[YR=2016] W145 S24 E145 N24$ S24 E15 N24$.

EXTRA FEATURES

LN	OB/XF CODE	DESCRIPTION	BLD	CAP	L	W	UNITS	UT	Adj R	ADJ UNIT PRICE	ORIG COND	YEAR ON	YEAR ACTUAL	Q	% COND	OB/XF MKT VALUE	NOTES

LAND DESCRIPTION

TOTAL OB/XF 0

LN	USE CODE	CLS	LAND USE DESCRIPTION	CAP	RD	LOC ZONE	FRONT	DEPTH	TOT LND UTS	UNIT TYPE	DT	DPTH FACT	% COND	TOT ADJ	UNIT PRICE	ADJ UNIT PRICE	LAND VALUE	OTHER ADJUSTMENTS AND NOTES	YEAR	DENSITY	DECL	FRZ	YR	CONSRV

REVIEW DATE 04/15/2025 BY KW Total Acres: 0.00 Total Land Value: 2,572,688 Market: 0 Agricultural: 0 Common: 0 PRINTED 07/30/2025 BY SYS

PT JOHN LOW GRANT
SEC 37-2N-27E & PT JOHN D
VAUGHAN GRANT SEC 38-2N-27E IN

BW AMELIA LLC
C/O BEACHWOLD PARTNERS LP, 257 PARK AVENUE SOUTH
NEW YORK, NY 10010

2025

37-2N-27-0000-0001-0110

NASSAU COUNTY PROPERTY

BUILDING CHARACTERISTICS

ELEMENT	CD	CONSTRUCTION
Exterior Wall	31	HARDIE BRD 100
Roof Structur	04	WOOD TRUSS 100
Roof Cover	03	COMP SHNGL 100
Interior Wall	05	DRYWALL 100
Interior Floo	03	CONC FINSH 100
Ceiling	02	F.NOT SUS 100
Air Condition	01	NONE 100
Heating Type	01	NONE 100
Fixtures		0 100
Frame	02	WOOD FRAME 100
Story Height		11 100
RMS		0 100
Stories	1.	1. 100
Units		16 100
Occupancy	00	NONE 100
Quality	05	Quality Level 05

DOR CODE	0300	MULTI-FAMILY	
MAP NUM		MKT AREA	04
NEIGHBORHOOD/LOC	4005.00		

AREA TYPE	TOTAL GROSS AREA	PCT OF BASE	YEAR	TOT ADJ AREA	SUBAREA MARKET VALUE
BAS	5,232	100	2015	5,232	161,280
TOTALS	5,232			5,232	161,280

MARKET ADJUSTMENTS

TYPE	MDL	EFF. AREA	TOT ADJ PTS	EFF. BASE RATE	REPL. COST NEW	AYB	EYB	ECON	FNCT		NORM	% COND
0304	04	5,232	99.5602	32.11	168,000	2015	2015	0	0	0	4.00	96.00

18 APART/GAR – 0% - 0 Heated Area: 5232 HX Base Yr

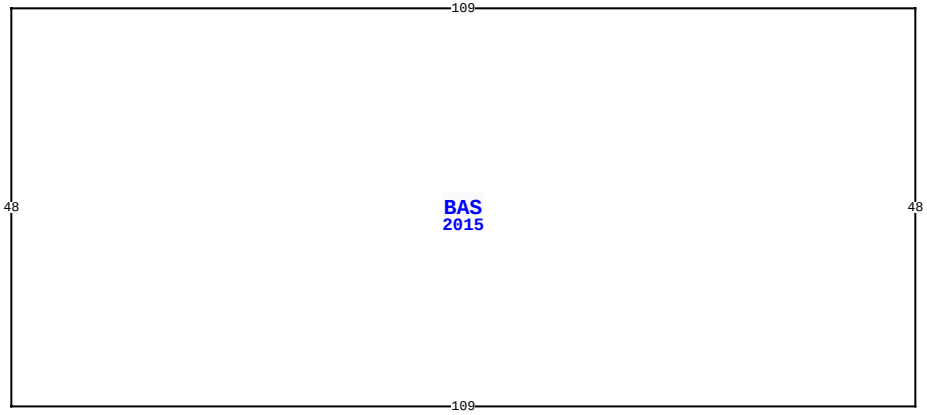

86016 CHRISTIAN WAY, YULEE

BLD DATE	04/15/2025	KW	LGL DATE		
XF DATE	04/15/2025	KW	LAND DATE	04/28/2025	DC
INC DATE	04/15/2025	REA	AG DATE		

VALUATION SUMMARY

VALUATION BY	DIRECT_CAP
Tax Group: 4	Tax Dist:
BUILDING MARKET VALUE	48,881,070
TOTAL MARKET OB/XF VALUE	0
TOTAL LAND VALUE - MARKET	0
TOTAL MARKET VALUE	51,453,758
SOH/AGL Deduction	0
ASSESSED VALUE	51,453,758
TOTAL EXEMPTION VALUE	0
BASE TAXABLE VALUE	51,453,758
TOTAL JUST VALUE	51,453,758
NCON VALUE	0
INCOME VALUE	51,453,758
PREVIOUS YEAR MKT VALUE	51,431,000

PERMIT NUM	DESCRIPTION	AMT	ISSUED

SALES DATA

OFF RECORD Number	DATE	TYPE INST	Q / U	V / I	RSN CD	SALE PRICE
2204/0589	6/19/2018	SW	Q	I	01	51,300,000
GRANTOR: THE RESERVE AMELIA LL						
GRANTEE: BW AMELIA LLC						
1964/1815	2/23/2015	MS	U	I	11	0
GRANTOR: LFW RESERVE LLC						
GRANTEE: THE RESERVE AMELIA						

BUILDING NOTES

BUILDING DIMENSIONS

BAS=[YR=2015] W109 S48 E109 N48$.

EXTRA FEATURES

L N	OB/XF CODE	DESCRIPTION	BLD	CAP	L	W	UNITS	UT	Adj R	ADJ UNIT PRICE	ORIG COND	YEAR ON	YEAR ACTUAL	Q	% COND	OB/XF MKT VALUE	NOTES

LAND DESCRIPTION

TOTAL OB/XF 0

L N	USE CODE	CLS	LAND USE DESCRIPTION	CAP	R D	LOC ZONE	FRONT	DEPTH	TOT LND UTS	UNIT TYPE	D T	DPTH FACT	% COND	TOT ADJ	UNIT PRICE	ADJ UNIT PRICE	LAND VALUE	OTHER ADJUSTMENTS AND NOTES	YEAR	DENSITY	DECL	FRZ	YR	CONSRV

REVIEW DATE 04/15/2025 BY KW Total Acres: 0.00 Total Land Value: 2,572,688 Market: 0 Agricultural: 0 Common: 0 PRINTED 07/30/2025 BY SYS

PT JOHN LOW GRANT
SEC 37-2N-27E & PT JOHN D
VAUGHAN GRANT SEC 38-2N-27E IN

BW AMELIA LLC
C/O BEACHWOLD PARTNERS LP, 257 PARK AVENUE SOUTH
NEW YORK, NY 10010

2025

37-2N-27-0000-0001-0110

NASSAU COUNTY PROPERTY

BUILDING CHARACTERISTICS

ELEMENT	CD	CONSTRUCTION
Exterior Wall	31	HARDIE BRD 100
Roof Structur	04	WOOD TRUSS 100
Roof Cover	03	COMP SHNGL 100
Interior Wall	05	DRYWALL 100
Interior Floo	03	CONC FINSH 100
Ceiling	02	F.NOT SUS 100
Air Condition	01	NONE 100
Heating Type	01	NONE 100
Fixtures		0 100
Frame	02	WOOD FRAME 100
Story Height		11 100
RMS		0 100
Stories	1.	1. 100
Units		16 100
Occupancy	00	NONE 100
Quality	05	Quality Level 05

DOR CODE	0300	MULTI-FAMILY	
MAP NUM		MKT AREA	04
NEIGHBORHOOD/LOC	4005.00		

AREA TYPE	TOTAL GROSS AREA	PCT OF BASE	YEAR	TOT ADJ AREA	SUBAREA MARKET VALUE
BAS	5,232	100	2016	5,232	162,120
TOTALS	5,232			5,232	162,120

MARKET ADJUSTMENTS

TYPE	MDL	EFF. AREA	TOT ADJ PTS	EFF. BASE RATE	REPL. COST NEW	AYB	EYB	ECON	FNCT		NORM	% COND
0304	04	5,232	99.5602	32.11	168,000	2016	2016	0	0	0	3.50	96.50

19 APART/GAR – 0% - 0 Heated Area: 5232 HX Base Yr

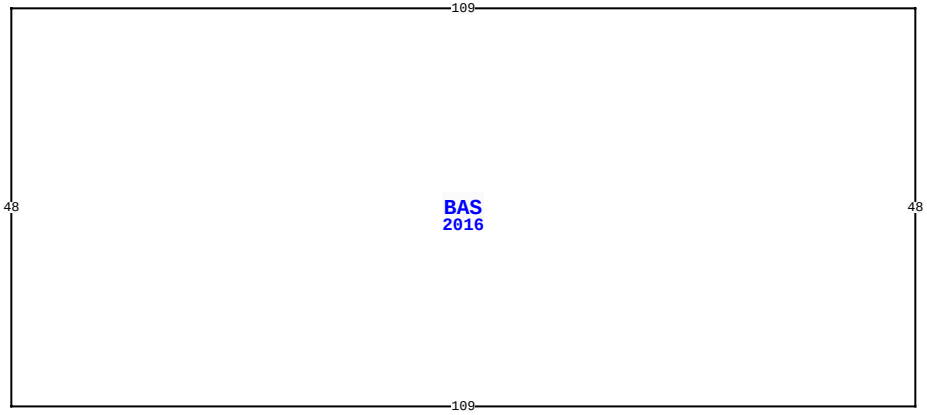

86016 CHRISTIAN WAY, YULEE

BLD DATE	04/15/2025	KW	LGL DATE		
XF DATE	04/15/2025	KW	LAND DATE	04/28/2025	DC
INC DATE	04/15/2025	REA	AG DATE		

VALUATION SUMMARY

VALUATION BY	DIRECT_CAP
Tax Group: 4	Tax Dist:
BUILDING MARKET VALUE	48,881,070
TOTAL MARKET OB/XF VALUE	0
TOTAL LAND VALUE - MARKET	0
TOTAL MARKET VALUE	51,453,758
SOH/AGL Deduction	0
ASSESSED VALUE	51,453,758
TOTAL EXEMPTION VALUE	0
BASE TAXABLE VALUE	51,453,758
TOTAL JUST VALUE	51,453,758
NCON VALUE	0
INCOME VALUE	51,453,758
PREVIOUS YEAR MKT VALUE	51,431,000

PERMIT NUM	DESCRIPTION	AMT	ISSUED

SALES DATA

OFF RECORD Number	DATE	TYPE INST	Q / U	V / I	RSN CD	SALE PRICE
2204/0589	6/19/2018	SW	Q	I	01	51,300,000
GRANTOR: THE RESERVE AMELIA LL						
GRANTEE: BW AMELIA LLC						
1964/1815	2/23/2015	MS	U	I	11	0
GRANTOR: LFW RESERVE LLC						
GRANTEE: THE RESERVE AMELIA						

BUILDING NOTES

BUILDING DIMENSIONS

BAS=[YR=2016] W109 S48 E109 N48$.

EXTRA FEATURES

LN	OB/XF CODE	DESCRIPTION	BLD	CAP	L	W	UNITS	UT	Adj R	ADJ UNIT PRICE	ORIG COND	YEAR ON	YEAR ACTUAL	Q	% COND	OB/XF MKT VALUE	NOTES

LAND DESCRIPTION

TOTAL OB/XF 0

LN	USE CODE	CLS	LAND USE DESCRIPTION	CAP	RD	LOC ZONE	FRONT	DEPTH	TOT LND UTS	UNIT TYPE	DT	DPTH FACT	% COND	TOT ADJ	UNIT PRICE	ADJ UNIT PRICE	LAND VALUE	OTHER ADJUSTMENTS AND NOTES	YEAR	DENSITY	DECL	FRZ	YR	CONSRV

REVIEW DATE 04/15/2025 BY KW Total Acres: 0.00 Total Land Value: 2,572,688 Market: 0 Agricultural: 0 Common: 0 PRINTED 07/30/2025 BY SYS

PT JOHN LOW GRANT
SEC 37-2N-27E & PT JOHN D
VAUGHAN GRANT SEC 38-2N-27E IN

BW AMELIA LLC
C/O BEACHWOLD PARTNERS LP, 257 PARK AVENUE SOUTH
NEW YORK, NY 10010

2025

37-2N-27-0000-0001-0110

BUILDING CHARACTERISTICS

ELEMENT	CD	CONSTRUCTION
Exterior Wall	31	HARDIE BRD 60
Exterior Wall	21	STONE 40
Roof Structur	04	WOOD TRUSS 100
Roof Cover	03	COMP SHNGL 100
Interior Wall	01	MINIMUM 100
Interior Floo	03	CONC FINSH 100
Ceiling	02	F.NOT SUS 100
Air Condition	01	NONE 100
Heating Type	01	NONE 100
Fixtures		7 100
Frame	03	MASONRY 100
Story Height		10 100
RMS		1 100
Stories	1.	1. 100
Units		0 100
Occupancy	00	NONE 100
Quality	05	Quality Level 05

DOR CODE 0300 MULTI-FAMILY
MAP NUM | MKT AREA 04
NEIGHBORHOOD/LOC 4005.00

AREA TYPE	TOTAL GROSS AREA	PCT OF BASE	YEAR	TOT ADJ AREA	SUBAREA MARKET VALUE
BAS	162	100	2015	162	4,625
CAN	108	30	2015	32	914
FST	270	50	2015	135	3,854
TOTALS	540			329	9,392

MARKET ADJUSTMENTS

TYPE	MDL	EFF. AREA	TOT ADJ PTS	EFF. BASE RATE	REPL. COST NEW	AYB	EYB	ECON	FNCT		NORM	% COND
0304	04	329	92.4084	29.80	9,804	2015	2015	0	0	0	4.20	95.80

20 APART/GAR – 0% - 0 Heated Area: 162 HX Base Yr

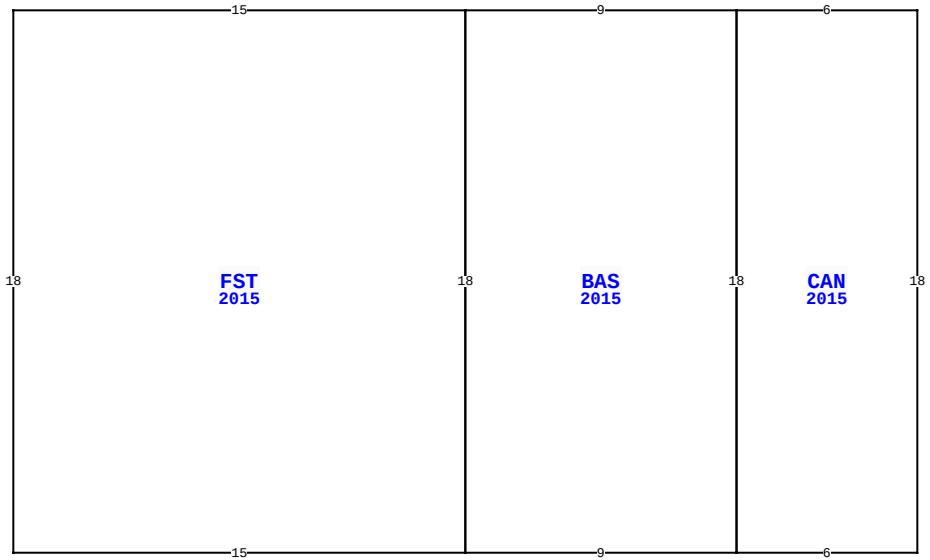

86016 CHRISTIAN WAY, YULEE

BLD DATE	04/15/2025	KW	LGL DATE	
XF DATE	04/15/2025	KW	LAND DATE	04/28/2025 DC
INC DATE	04/15/2025	REA	AG DATE	

NASSAU COUNTY PROPERTY

VALUATION SUMMARY

VALUATION BY	DIRECT_CAP
Tax Group: 4	Tax Dist:
BUILDING MARKET VALUE	48,881,070
TOTAL MARKET OB/XF VALUE	0
TOTAL LAND VALUE - MARKET	0
TOTAL MARKET VALUE	51,453,758
SOH/AGL Deduction	0
ASSESSED VALUE	51,453,758
TOTAL EXEMPTION VALUE	0
BASE TAXABLE VALUE	51,453,758
TOTAL JUST VALUE	51,453,758
NCON VALUE	0
INCOME VALUE	51,453,758
PREVIOUS YEAR MKT VALUE	51,431,000

PERMIT NUM	DESCRIPTION	AMT	ISSUED

SALES DATA

OFF RECORD Number	DATE	TYPE INST	Q / U	V / I	RSN CD	SALE PRICE
2204/0589	6/19/2018	SW	Q	I	01	51,300,000
GRANTOR: THE RESERVE AMELIA LL						
GRANTEE: BW AMELIA LLC						
1964/1815	2/23/2015	MS	U	I	11	0
GRANTOR: LFW RESERVE LLC						
GRANTEE: THE RESERVE AMELIA						

BUILDING NOTES

BUILDING DIMENSIONS

CAN=[YR=2015] W6 BAS=[YR=2015] W9 FST=[YR=2015] W15 S18 E15 N18$ S18 E9 N18$ S18 E6 N18$.

EXTRA FEATURES

LN	OB/XF CODE	DESCRIPTION	BLD	CAP	L	W	UNITS	UT	Adj R	ADJ UNIT PRICE	ORIG COND	YEAR ON	YEAR ACTUAL	Q	% COND	OB/XF MKT VALUE	NOTES

LAND DESCRIPTION

TOTAL OB/XF 0

LN	USE CODE	CLS	LAND USE DESCRIPTION	CAP	RD	LOC ZONE	FRONT	DEPTH	TOT LND UTS	UNIT TYPE	DT	DPTH FACT	% COND	TOT ADJ	UNIT PRICE	ADJ UNIT PRICE	LAND VALUE	OTHER ADJUSTMENTS AND NOTES	YEAR	DENSITY	DECL	FRZ	YR	CONSRV

REVIEW DATE 04/15/2025 BY KW Total Acres: 0.00 Total Land Value: 2,572,688 Market: 0 Agricultural: 0 Common: 0 PRINTED 07/30/2025 BY SYS