TRACT 63
NASSAU VILLAGE WEST PB 5/23

EDDY SHARON E
540591 LEM TURNER RD
CALLAHAN, FL 32011

2025

37-1N-25-299F-0063-0000

NASSAU COUNTY PROPERTY

BUILDING CHARACTERISTICS

ELEMENT	CD	CONSTRUCTION
Exterior Wall	05	AVERAGE 90
Exterior Wall	15	CONC BLOCK 10
Roof Structur	03	GABLE/HIP 100
Roof Cover	12	MODULAR MT 100
Interior Wall	05	DRYWALL 70
Interior Wall	04	PLYWOOD 30
Interior Floo	14	CARPET 80
Interior Floo	08	SHT VINYL 20
Air Condition	03	CENTRAL 100
Heating Type	04	AIR DUCTED 100
Bedrooms		3 100
Bathrooms		2 100
Frame	02	WOOD FRAME 100
Stories	1.	1. 100
Units		1 100
BUD8 Adjustme	06	DIST 1D 100
Quality	03	Quality Level 03
DOR CODE	0200	MOBILE HOME
MAP NUM		MKT AREA 08
NEIGHBORHOOD/LOC	8026.00	

AREA TYPE	TOTAL GROSS AREA	PCT OF BASE	YEAR	TOT ADJ AREA	SUBAREA MARKET VALUE
BAS	1,345	100	1993	1,345	79,093
BAS	264	100	2005	264	15,525
BAS	600	100	2005	600	35,283
FSP	336	40	1993	134	7,880
FST	120	55	2005	66	3,881
UOP	240	20	1993	48	2,822
UOP	241	20	1993	48	2,822
TOTALS	3,146			2,505	147,307

MARKET ADJUSTMENTS

TYPE	MDL	EFF. AREA	TOT ADJ PTS	EFF. BASE RATE	REPL. COST NEW	AYB	EYB	ECON	FNCT		NORM	% COND
0110	01	2,505	100.1280	74.09	185,595	1973	1973	0	0	0	20.63	79.37

1 MH/SFR – 100% - 2022 Heated Area: 2209 HX Base Yr 2022

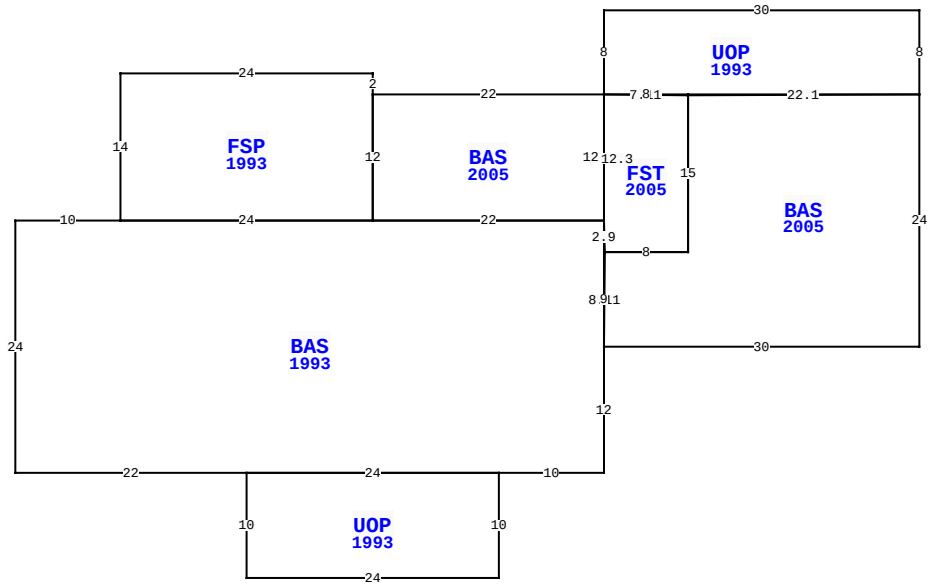

540591 LEM TURNER RD, CALLAHAN

BLD DATE		LGL DATE	
XF DATE		LAND DATE	03/31/2025 MLU
INC DATE		AG DATE	

VALUATION SUMMARY

VALUATION BY		STANDARD
Tax Group: 6	Tax Dist:	
BUILDING MARKET VALUE		147,307
TOTAL MARKET OB/XF VALUE		5,622
TOTAL LAND VALUE - MARKET		50,000
TOTAL MARKET VALUE		202,929
SOH/AGL Deduction		45,020
ASSESSED VALUE		157,909
TOTAL EXEMPTION VALUE	HX HB WX SX	105,722
BASE TAXABLE VALUE		52,187
TOTAL JUST VALUE		202,929
NCON VALUE		0
INCOME VALUE		
PREVIOUS YEAR MKT VALUE		192,353

PERMIT NUM	DESCRIPTION	AMT	ISSUED
R2307943	ROOF	15,000	06/21/2023

SALES DATA

OFF RECORD Number	DATE	TYPE INST	Q / U	V / I	RSN CD	SALE PRICE
2441/0272	2/24/2021	WD	Q	I	02	75,000
GRANTOR: HATCHER JENNIFER RENE						
GRANTEE: EDDY JOHN C & SHARO						
2133/0005	6/30/2017	WD	Q	I	01	74,000
GRANTOR: BOATRIGHT FLOYD D & V						
GRANTEE: HATCHER JENNIFER RE						

BUILDING NOTES

BUILDING DIMENSIONS

BAS=[YR=1993;ORIG=-52,20] W24 W10 S24 E22 E24 E10 N12
U8.11R0.1 U3.1L0.1 W22 $
BAS=[YR=2005;ORIG=-30,32] E30 N24 W22 S15 W8 S9 $
FSP=[YR=1993;ORIG=-52,8] N2 W24 S14 E24 N12 $
BAS=[YR=2005;ORIG=-30,8] W22 S12 E22 N12 $
UOP=[YR=1993;ORIG=0,0] W30 S8 D0.1R7.11 U0.1R22.1 N8 $
UOP=[YR=1993;ORIG=-64,44] S10 E24 N10 W24 $
FST=[YR=2005;ORIG=-30,8] S12.3 S2.9 E8 N15 W8 $
.

EXTRA FEATURES

LN	OB/XF CODE	DESCRIPTION	BLD	CAP	L	W	UNITS	UT	Adj R	ADJ UNIT PRICE	ORIG COND	YEAR ON	YEAR ACTUAL	Q	% COND	OB/XF MKT VALUE	NOTES
1	0811	CONCRETE B	0	100	0	0	832.00	SF	5.20	5.20	100	1987	1987	3	49.5	2,142	
2	0200	BARN WD 0-	0	100	30	29	870.00	SF	20.00	20.00	100	1994	1994	3	20	3,480	

LAND DESCRIPTION

TOTAL OB/XF 5,622

LN	USE CODE	CLS	LAND USE DESCRIPTION	CAP	RD	LOC ZONE	FRONT	DEPTH	TOT LND UTS	UNIT TYPE	DT	DPTH FACT	% COND	TOT ADJ	UNIT PRICE	ADJ UNIT PRICE	LAND VALUE	OTHER ADJUSTMENTS AND NOTES	YEAR	DENSITY	DECL	FRZ	YR	CONSRV
1	000100	C	RES	100		RM	150.00	303.00	1.00	LT		1.00	1.00	1.00	50,000.00	50,000.00	50,000							

REVIEW DATE 12/11/2024 BY TW Total Acres: 0.00 Total Land Value: 50,000 Market: 0 Agricultural: 0 Common: 50,000 PRINTED 07/30/2025 BY SYS