LOT 25
IN OR 1055/569
NASSAU VILLAGE 1 UNR

KRUG CONNIE
54292 MARLEE RD
CALLAHAN, FL 32011

2025

37-1N-25-299A-0025-0000

BUILDING CHARACTERISTICS

ELEMENT	CD	CONSTRUCTION
Exterior Wall	10	ABOVE AVG 70
Exterior Wall	15	CONC BLOCK 30
Roof Structur	03	GABLE/HIP 100
Roof Cover	03	COMP SHNGL 100
Interior Wall	07	NONE 100
Interior Floo	03	CONC FINSH 100
Air Condition	01	NONE 100
Heating Type	01	NONE 100
Bedrooms		0 100
Bathrooms		0 100
Frame	02	WOOD FRAME 100
Stories	1.	1. 100
Units		0 100
Occupancy	00	NONE 100
Quality	04	Quality Level 04

DOR CODE	0100	SINGLE FAMILY	
MAP NUM		MKT AREA	08
NEIGHBORHOOD/LOC	8026.00		

AREA TYPE	TOTAL GROSS AREA	PCT OF BASE	YEAR	TOT ADJ AREA	SUBAREA MARKET VALUE
BAS	816	100	2004	816	11,093
TOTALS	816			816	11,093

MARKET ADJUSTMENTS

TYPE	MDL	EFF. AREA	TOT ADJ PTS	EFF. BASE RATE	REPL. COST NEW	AYB	EYB	ECON	FNCT		NORM	% COND
6500	01	816	52.5000	19.42	15,847	2004	2004	0	0	0	30.00	70.00

1 GARAGE RES – 100% - 2009 Heated Area: 816 HX Base Yr 2009

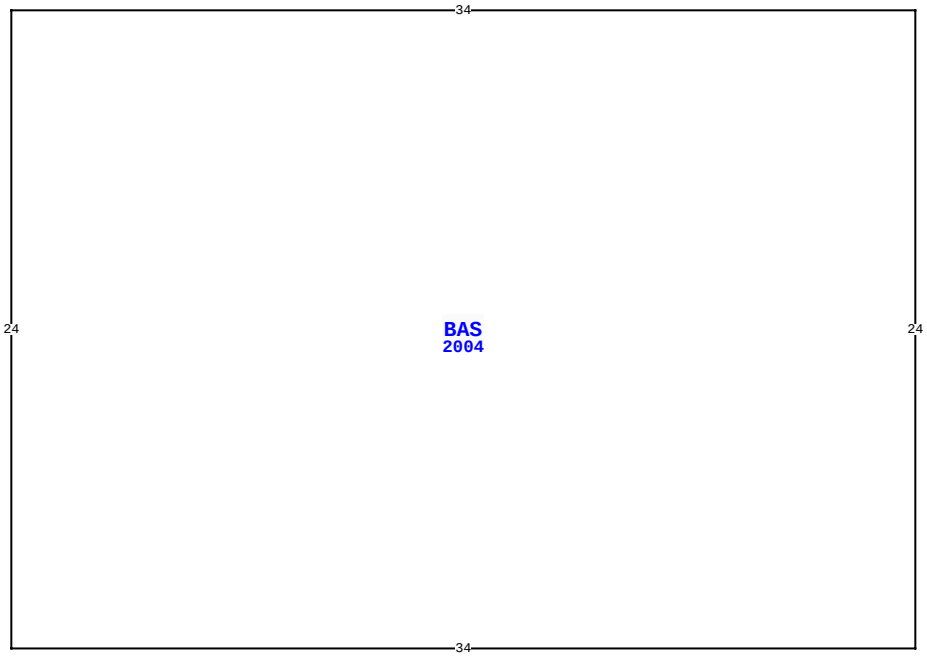

54292 MARLEE RD, CALLAHAN

BLD DATE		LGL DATE	
XF DATE		LAND DATE	03/31/2025 MLU
INC DATE		AG DATE	

NASSAU COUNTY PROPERTY

PAGE 1 of 2 6

VALUATION SUMMARY

VALUATION BY		STANDARD
Tax Group: 6	Tax Dist:	
BUILDING MARKET VALUE		275,967
TOTAL MARKET OB/XF VALUE		0
TOTAL LAND VALUE - MARKET		50,000
TOTAL MARKET VALUE		325,967
SOH/AGL Deduction		192,385
ASSESSED VALUE		133,582
TOTAL EXEMPTION VALUE	HX HB WX	55,722
BASE TAXABLE VALUE		77,860
TOTAL JUST VALUE		325,967
NCON VALUE		0
INCOME VALUE		
PREVIOUS YEAR MKT VALUE		307,982

PERMIT NUM	DESCRIPTION	AMT	ISSUED
B23461	ADDITION	3,597	04/01/2010
B23520	XFOB	2,698	04/01/2010
E21480	ELEC OTHER	150	12/01/2008
M11163	MECH OTHER	0	03/01/2006
P10814	OTHER	0	03/01/2006
C11024	CO ISSUED	0	04/01/2003

SALES DATA

OFF RECORD Number	DATE	TYPE INST	Q U /	V I /	RSN CD	SALE PRICE
1055/0569	5/13/2002	WD	Q	V		20,000
GRANTOR: WILLIAMS ROBERT F						
GRANTEE: KRUG DONALD & CONNI						
0147/0468	6/20/2973	WD	Q	V		3,000
GRANTOR: NASSAU VILLAGE INC						
GRANTEE: WILLIAMS ROBERT F						

BUILDING NOTES

BUILDING DIMENSIONS

BAS=[YR=2004] W34 S24 E34 N24$.

EXTRA FEATURES

LN	OB/XF CODE	DESCRIPTION	BLD	CAP	L	W	UNITS	UT	Adj R	ADJ UNIT PRICE	ORIG COND	YEAR ON	YEAR ACTUAL	Q	% COND	OB/XF MKT VALUE	NOTES

LAND DESCRIPTION

TOTAL OB/XF 0

LN	USE CODE	CLS	LAND USE DESCRIPTION	CAP	RD	LOC ZONE	FRONT	DEPTH	TOT LND UTS	UNIT TYPE	DT	DPTH FACT	% COND	TOT ADJ	UNIT PRICE	ADJ UNIT PRICE	LAND VALUE	OTHER ADJUSTMENTS AND NOTES	YEAR	DENSITY	DECL	FRZ	YR	CONSRV
1	000100	C	RES	100		RM	134.00	310.00	1.00	LT		1.00	1.00	1.00	50,000.00	50,000.00	50,000							

REVIEW DATE 04/20/2020 BY KBA Total Acres: 0.00 Total Land Value: 50,000 Market: 0 Agricultural: 0 Common: 50,000 PRINTED 07/30/2025 BY SYS

LOT 25
IN OR 1055/569
NASSAU VILLAGE 1 UNR

KRUG CONNIE
54292 MARLEE RD
CALLAHAN, FL 32011

2025

37-1N-25-299A-0025-0000

NASSAU COUNTY PROPERTY

BUILDING CHARACTERISTICS

ELEMENT	CD	CONSTRUCTION
Exterior Wall	10	ABOVE AVG 100
Roof Structur	03	GABLE/HIP 100
Roof Cover	03	COMP SHNGL 100
Interior Wall	05	DRYWALL 50
Interior Wall	06	CUST PANEL 50
Interior Floo	14	CARPET 60
Interior Floo	12	HARDWOOD 40
Air Condition	03	CENTRAL 100
Heating Type	04	AIR DUCTED 100
Bedrooms		3 100
Bathrooms		2 100
Frame	02	WOOD FRAME 100
Stories	1.5	1.5 100
Units		0 100
Occupancy	00	NONE 100
Quality	01	Quality Level 01
DOR CODE	0100	SINGLE FAMILY
MAP NUM		MKT AREA 08
NEIGHBORHOOD/LOC	8026.00	

AREA TYPE	TOTAL GROSS AREA	PCT OF BASE	YEAR	TOT ADJ AREA	SUBAREA MARKET VALUE
BAS	1,920	100	2008	1,920	236,758
DCK	116	10	2008	12	1,480
DCK	256	10	2008	26	3,206
DCK	144	10	2010	14	1,726
FUS	112	100	2008	112	13,811
STR	16	10	2008	2	247
STR	16	10	2008	2	247
STR	16	10	2008	2	247
USP	192	30	2010	58	7,152
TOTALS	2,788			2,148	264,874

MARKET ADJUSTMENTS

TYPE	MDL	EFF. AREA	TOT ADJ PTS	EFF. BASE RATE	REPL. COST NEW	AYB	EYB	ECON	FNCT		NORM	% COND
0900	01	2,148	100.9890	133.31	286,350	2008	2008	0	0	0	7.50	92.50

2 SNGL FAM – 100% - 2009 Heated Area: 2032 HX Base Yr 2009

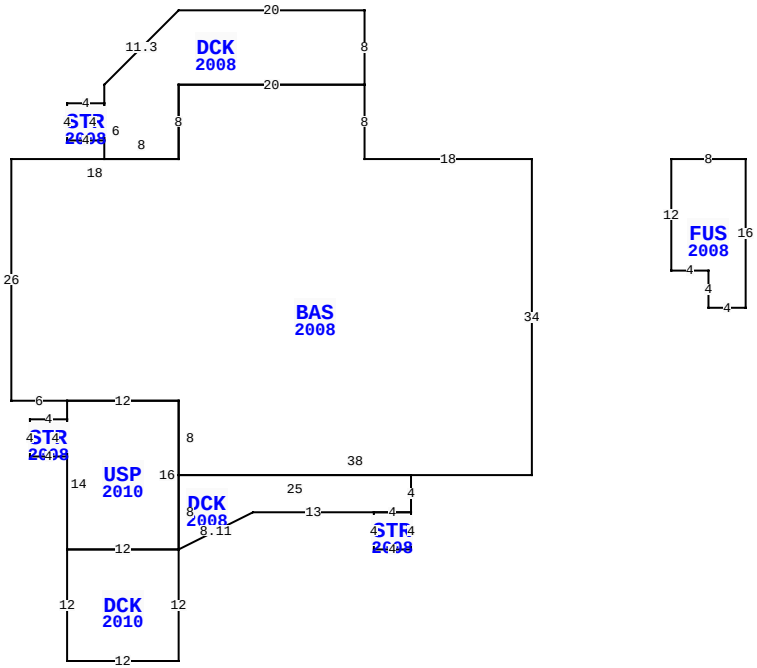

54292 MARLEE RD, CALLAHAN

BLD DATE		LGL DATE	
XF DATE		LAND DATE	03/31/2025 MLU
INC DATE		AG DATE	

VALUATION SUMMARY

VALUATION BY		STANDARD
Tax Group: 6	Tax Dist:	
BUILDING MARKET VALUE		275,967
TOTAL MARKET OB/XF VALUE		0
TOTAL LAND VALUE - MARKET		50,000
TOTAL MARKET VALUE		325,967
SOH/AGL Deduction		192,385
ASSESSED VALUE		133,582
TOTAL EXEMPTION VALUE	HX HB WX	55,722
BASE TAXABLE VALUE		77,860
TOTAL JUST VALUE		325,967
NCON VALUE		0
INCOME VALUE		
PREVIOUS YEAR MKT VALUE		307,982

PERMIT NUM	DESCRIPTION	AMT	ISSUED
B11023	GARAGE	25,344	04/01/2003
B11024	NEW CONSTR	125,400	04/01/2003
E11036	NEW CONSTR	2,000	04/01/2003
R4969	REPAIR/RRF	5,000	04/01/2003

SALES DATA

OFF RECORD Number	DATE	TYPE INST	Q U	V I	RSN CD	SALE PRICE
1055/0569	5/13/2002	WD	Q	V		20,000
GRANTOR: WILLIAMS ROBERT F						
GRANTEE: KRUG DONALD & CONNI						
0147/0468	6/20/1973	WD	Q	V		3,000
GRANTOR: NASSAU VILLAGE INC						
GRANTEE: WILLIAMS ROBERT F						

BUILDING NOTES

BUILDING DIMENSIONS

BAS=[YR=2008] W18 N8 DCK=[YR=2008] N8 W20 D8 L8 S2
STR=[YR=2008] W4 S4 E4 N4$ S6 E8 N8 E20$ W20 S8 W18 S26 E6
USP=[YR=2010] S2 STR=[YR=2008] W4 S4 E4 N4$ S14
DCK=[YR=2010] S12 E12 N12 W12$ E12 DCK=[YR=2008] U4 R8 E13
STR=[YR=2008] S4E4N4W4$ E4 N4 W25 S8$ N16 W12$ E12 S8 E38
N34$ PTR=E15 FUS=[YR=2008] E8 S16 W4 N4 W4 N12$ W15$.

EXTRA FEATURES

LN	OB/XF CODE	DESCRIPTION	BLD	CAP	L	W	UNITS	UT	Adj R	ADJ UNIT PRICE	ORIG COND	YEAR ON	YEAR ACTUAL	Q	% COND	OB/XF MKT VALUE	NOTES

LAND DESCRIPTION

TOTAL OB/XF 0

LN	USE CODE	CLS	LAND USE DESCRIPTION	CAP	RD	LOC ZONE	FRONT	DEPTH	TOT LND UTS	UNIT TYPE	DT	DPTH FACT	% COND	TOT ADJ	UNIT PRICE	ADJ UNIT PRICE	LAND VALUE	OTHER ADJUSTMENTS AND NOTES	YEAR	DENSITY	DECL	FRZ	YR	CONSRV

REVIEW DATE 04/20/2020 BY KBA Total Acres: 0.00 Total Land Value: 50,000 Market: 0 Agricultural: 0 Common: 50,000 PRINTED 07/30/2025 BY SYS