LOT 54
IN OR 2244/678
DEERFIELD ACRES PB 5/299

MCCRACKEN JONATHAN
54170 JESSICA PL
CALLAHAN, FL 32011

2025

37-1N-25-0340-0054-0000

NASSAU COUNTY PROPERTY

BUILDING CHARACTERISTICS

ELEMENT	CD	CONSTRUCTION
Exterior Wall	30	VINYL 100
Roof Structur	03	GABLE/HIP 100
Roof Cover	03	COMP SHNGL 100
Interior Wall	05	DRYWALL 100
Interior Floo	14	CARPET 70
Interior Floo	14	CARPET 30
Air Condition	03	CENTRAL 100
Heating Type	04	AIR DUCTED 100
Bedrooms		3 100
Bathrooms		2 100
Frame	02	WOOD FRAME 100
Stories	1.	1. 100
Units		0 100
Occupancy	00	NONE 100
Quality	06	Quality Level 06
DOR CODE	0100	SINGLE FAMILY
MAP NUM		MKT AREA 08
NEIGHBORHOOD/LOC	8027.00	

AREA TYPE	TOTAL GROSS AREA	PCT OF BASE	YEAR	TOT ADJ AREA	SUBAREA MARKET VALUE
BAS	1,450	100	1998	1,450	155,674
BAS	90	100	2009	90	9,663
FGR	440	55	1998	242	25,981
FOP	36	30	1998	11	1,181
TOTALS	2,016			1,793	192,499

MARKET ADJUSTMENTS

TYPE	MDL	EFF. AREA	TOT ADJ PTS	EFF. BASE RATE	REPL. COST NEW	AYB	EYB	ECON	FNCT		NORM	% COND
0100	01	1,793	123.0500	123.05	220,629	1998	1998	0	0	0	12.75	87.25

1 SINGLE FAM – 100% - 2019 Heated Area: 1540 HX Base Yr 2019

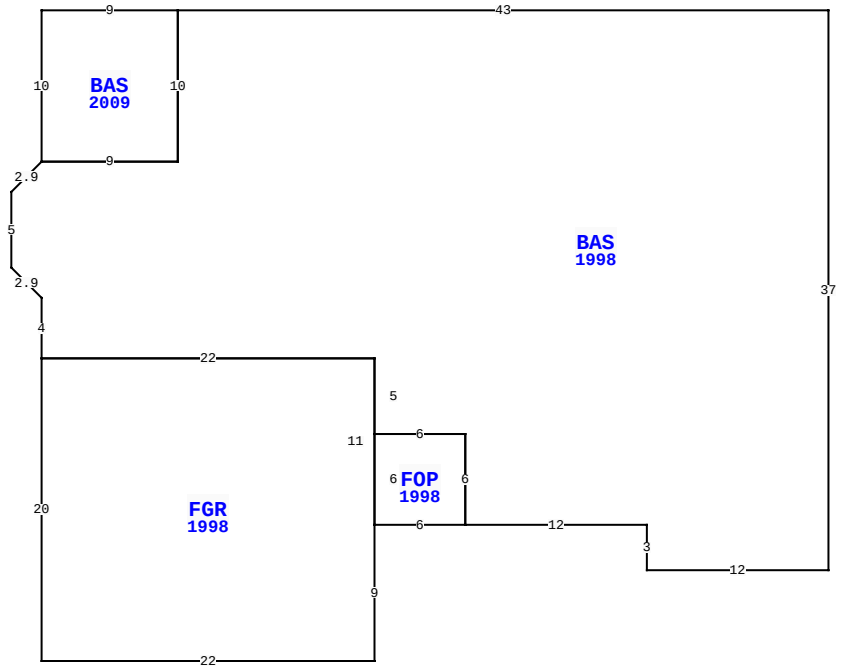

54170 JESSICA PL, CALLAHAN

BLD DATE		LGL DATE	
XF DATE		LAND DATE	
INC DATE		AG DATE	

VALUATION SUMMARY

VALUATION BY		STANDARD
Tax Group: 6	Tax Dist:	
BUILDING MARKET VALUE		192,499
TOTAL MARKET OB/XF VALUE		8,831
TOTAL LAND VALUE - MARKET		60,000
TOTAL MARKET VALUE		261,330
SOH/AGL Deduction		78,899
ASSESSED VALUE		182,431
TOTAL EXEMPTION VALUE	HX HB	50,722
BASE TAXABLE VALUE		131,709
TOTAL JUST VALUE		261,330
NCON VALUE		0
INCOME VALUE		
PREVIOUS YEAR MKT VALUE		232,976

PERMIT NUM	DESCRIPTION	AMT	ISSUED
B985101	GARAGE	81,100	06/01/1998

SALES DATA

OFF RECORD Number	DATE	TYPE INST	Q U	V I	RSN CD	SALE PRICE
2244/0678	12/18/2018	WD	Q	I	01	185,000
GRANTOR: MATTHEW 25 INVESTMENT						
GRANTEE: MCCRACKEN JONATHAN						
2203/1919	6/18/2018	CT	U	I	18	133,600
GRANTOR: CLERK OF COURT						
GRANTEE: MATTHEW 25 INVESTME						

BUILDING NOTES

BUILDING DIMENSIONS

BAS=[YR=1998] W43 BAS=[YR=2009] W9 S10 E9 N10$ S10 W9 L2 D2 S5 R2 D2 S4 FGR=[YR=1998] S20 E22 N9 FOP=[YR=1998] E6 N6 W6 S6$ N11 W22$ E22 S5 E6 S6 E12 S3 E12 N37$.

EXTRA FEATURES

LN	OB/XF CODE	DESCRIPTION	BLD	CAP	L	W	UNITS	UT	Adj R	ADJ UNIT PRICE	ORIG COND	YEAR ON	YEAR ACTUAL	Q	% COND	OB/XF MKT VALUE	NOTES
1	0810	CONCRETE A	0	100	0	0	1,524.00	SF	6.50	6.50	100	1998	1998	3	73	7,231	
2	0504	FP-ELECTRI	0	100	0	0	1.00	UT	2,000.00	2,000.00	100	1998	1998	3	80	1,600	

LAND DESCRIPTION

TOTAL OB/XF 8,831

LN	USE CODE	CLS	LAND USE DESCRIPTION	CAP	RD	LOC ZONE	FRONT	DEPTH	TOT LND UTS	UNIT TYPE	DT	DPTH FACT	% COND	TOT ADJ	UNIT PRICE	ADJ UNIT PRICE	LAND VALUE	OTHER ADJUSTMENTS AND NOTES	YEAR	DENSITY	DECL	FRZ	YR	CONSRV
1	000100	C	RES	100	0006	RSF-1	0.00	0.00	1.00	LT		1.00	1.00	1.00	60,000.00	60,000.00	60,000							

REVIEW DATE 06/03/2024 BY TWA Total Acres: 0.00 Total Land Value: 60,000 Market: 0 Agricultural: 0 Common: 60,000 PRINTED 07/30/2025 BY SYS