LOT 29
DEERFIELD ACRES PB 5/299

SHEEHE GENA L/E/
54165 JESSICA PLACE
CALLAHAN, FL 32011

2025

37-1N-25-0340-0029-0000

BUILDING CHARACTERISTICS

ELEMENT	CD	CONSTRUCTION
Exterior Wall	05	AVERAGE 100
Roof Structur	03	GABLE/HIP 100
Roof Cover	03	COMP SHNGL 100
Interior Wall	05	DRYWALL 100
Interior Floo	14	CARPET 90
Interior Floo	08	SHT VINYL 10
Air Condition	03	CENTRAL 100
Heating Type	04	AIR DUCTED 100
Bedrooms		3 100
Bathrooms		2 100
Frame	02	WOOD FRAME 100
Stories	1.	1. 100
Units		0 100
Occupancy	00	NONE 100
Quality	06	Quality Level 06
DOR CODE	0100	SINGLE FAMILY
MAP NUM		MKT AREA 08
NEIGHBORHOOD/LOC	8027.00	

AREA TYPE	TOTAL GROSS AREA	PCT OF BASE	YEAR	TOT ADJ AREA	SUBAREA MARKET VALUE
BAS	1,382	100	1996	1,382	149,414
FGR	410	55	1996	226	24,434
FOP	82	30	1996	25	2,703
FOP	129	30	1996	39	4,217
UCP	380	20	2013	76	8,217
UOP	152	20	1996	30	3,244
TOTALS	2,535			1,778	192,227

MARKET ADJUSTMENTS

TYPE	MDL	EFF. AREA	TOT ADJ PTS	EFF. BASE RATE	REPL. COST NEW	AYB	EYB	ECON	FNCT		NORM	% COND
0100	01	1,778	125.3500	125.35	222,872	1996	1996	0	0	0	13.75	86.25

1 SINGLE FAM – 100% - 2009 Heated Area: 1382 HX Base Yr 2009

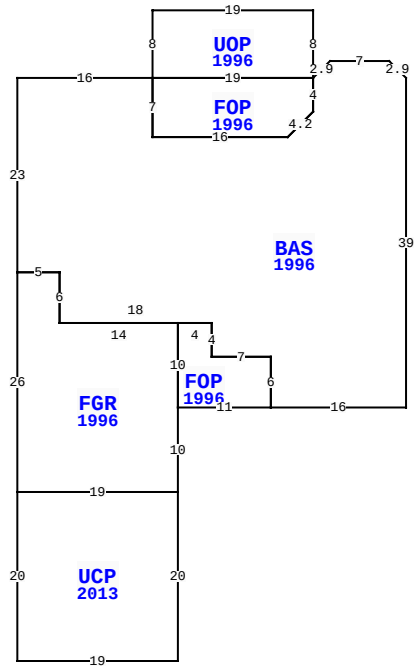

54165 JESSICA PL, CALLAHAN

BLD DATE		LGL DATE	
XF DATE		LAND DATE	
INC DATE		AG DATE	

NASSAU COUNTY PROPERTY

PAGE 1 of 1 6

VALUATION SUMMARY

VALUATION BY		STANDARD
Tax Group: 6	Tax Dist:	
BUILDING MARKET VALUE		192,227
TOTAL MARKET OB/XF VALUE		3,442
TOTAL LAND VALUE - MARKET		60,000
TOTAL MARKET VALUE		255,669
SOH/AGL Deduction		130,401
ASSESSED VALUE		125,268
TOTAL EXEMPTION VALUE	HX HB WX	55,722
BASE TAXABLE VALUE		69,546
TOTAL JUST VALUE		255,669
NCON VALUE		0
INCOME VALUE		
PREVIOUS YEAR MKT VALUE		227,203

PERMIT NUM	DESCRIPTION	AMT	ISSUED
B22844	XFOB	8,035	09/01/2009
B952353	NEW CONSTR	78,000	12/01/1995

SALES DATA

OFF RECORD Number	DATE	TYPE INST	Q / U	V / I	RSN CD	SALE PRICE
2302/1522	9/03/2019	WD	U	I	11	100
GRANTOR: SHEEHE GENA						
GRANTEE: HARRIS KELLY E & KI						
1576/1152	7/14/2008	WD	Q	I		165,000
GRANTOR: LUMSDEN ROBIN H						
GRANTEE: SHEEHE RICHARD & GE						

BUILDING NOTES

BUILDING DIMENSIONS

BAS=[YR=1996;ORIG=0,0] U2L2 W7 D2L2 S4 D3L3 W16 N7 W16 S23 E5 S6 E18 S4 E7 S6 E16 N39 $
FGR=[YR=1996;ORIG=-46,23] S26 E19 N10 N10 W14 N6 W5 $
UCP=[YR=2013;ORIG=-46,49] S20 E19 N20 W19 $
UOP=[YR=1996;ORIG=-11,0] N8 W19 S8 E19 $
FOP=[YR=1996;ORIG=-30,0] S7 E16 U3R3 N4 W19 $
FOP=[YR=1996;ORIG=-27,39] E11 N6 W7 N4 W4 S10 $
.

EXTRA FEATURES

LN	OB/XF CODE	DESCRIPTION	BLD	CAP	L	W	UNITS	UT	Adj R	ADJ UNIT PRICE	ORIG COND	YEAR ON	YEAR ACTUAL	Q	% COND	OB/XF MKT VALUE	NOTES
1	0500	FP-PRE FAB	0	100	0	0	1.00	UT	3,500.00	3,500.00	100	1996	1996	3	77	2,695	
2	0810	CONCRETE A	0	100	13	4	52.00	SF	6.50	6.50	100	1996	1996	3	70	237	
3	0810	CONCRETE A	0	100	28	4	112.00	SF	6.50	6.50	100	1996	1996	3	70	510	

LAND DESCRIPTION

TOTAL OB/XF 3,442

LN	USE CODE	CLS	LAND USE DESCRIPTION	CAP	RD	LOC ZONE	FRONT	DEPTH	TOT LND UTS	UNIT TYPE	DT	DPTH FACT	% COND	TOT ADJ	UNIT PRICE	ADJ UNIT PRICE	LAND VALUE	OTHER ADJUSTMENTS AND NOTES	YEAR	DENSITY	DECL	FRZ	YR	CONSRV
1	000100	C	RES	100	0006	RSF-1	0.00	0.00	1.00	LT		1.00	1.00	1.00	60,000.00	60,000.00	60,000							

REVIEW DATE 06/03/2024 BY TWA Total Acres: 0.00 Total Land Value: 60,000 Market: 0 Agricultural: 0 Common: 60,000 PRINTED 07/30/2025 BY SYS