PARCEL 19
IN OR 2291/1411
ESMT IN OR 244/613

WILDER ERNEST TERRY & RENEA L
95088 WILDER BLVD
FERNANDINA BEACH, FL 32034

2025

34-2N-28-0000-0019-0000

NASSAU COUNTY PROPERTY

BUILDING CHARACTERISTICS

ELEMENT	CD	CONSTRUCTION
Exterior Wall	10	ABOVE AVG 100
Roof Structur	03	GABLE/HIP 100
Roof Cover	03	COMP SHNGL 100
Interior Wall	05	DRYWALL 90
Interior Wall	04	PLYWOOD 10
Interior Floo	13	LVT/LAMNT 100
Air Condition	03	CENTRAL 100
Heating Type	04	AIR DUCTED 100
Bedrooms		3 100
Bathrooms		3 100
Frame	02	WOOD FRAME 100
Stories	1.	1. 100
Units		0 100
BUD8 Adjustme	04	DIST 01 100
Occupancy	00	NONE 100
Quality	02	Quality Level 02

DOR CODE	0100	SINGLE FAMILY	
MAP NUM		MKT AREA	04
NEIGHBORHOOD/LOC	4005.00		

AREA TYPE	TOTAL GROSS AREA	PCT OF BASE	YEAR	TOT ADJ AREA	SUBAREA MARKET VALUE
BAS	1,617	100	2017	1,617	219,746
FCP	660	25	2017	165	22,423
FEP	182	80	2017	146	19,841
FOP	96	30	2017	29	3,941
FOP	126	30	2017	38	5,164
TOTALS	2,681			1,995	271,115

MARKET ADJUSTMENTS

TYPE	MDL	EFF. AREA	TOT ADJ PTS	EFF. BASE RATE	REPL. COST NEW	AYB	EYB	ECON	FNCT		NORM	% COND
0900	01	1,995	106.1340	140.10	279,500	2017	2017	0	0	0	3.00	97.00

1 SNGL FAM – 100% - 2018 Heated Area: 1617 HX Base Yr 2018

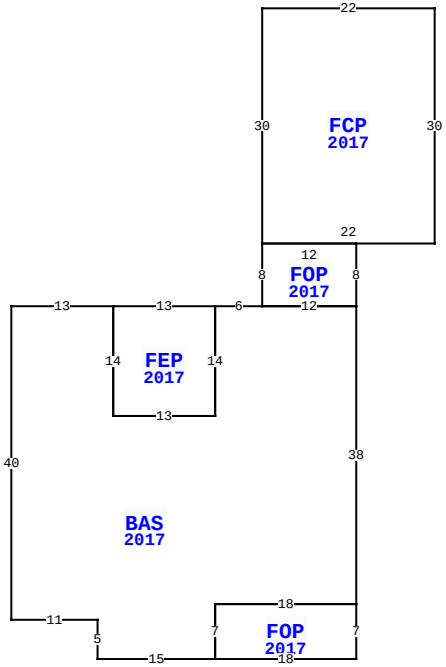

BLD DATE	03/03/2023 NW	LGL DATE	
XF DATE		LAND DATE	05/09/2025 MLU
INC DATE		AG DATE	

95088 WILDER BLVD, FERNANDINA BEACH

VALUATION SUMMARY

VALUATION BY		STANDARD
Tax Group: 4	Tax Dist:	
BUILDING MARKET VALUE		271,115
TOTAL MARKET OB/XF VALUE		10,034
TOTAL LAND VALUE - MARKET		87,450
TOTAL MARKET VALUE		368,599
SOH/AGL Deduction		184,547
ASSESSED VALUE		184,052
TOTAL EXEMPTION VALUE	HX HB	50,722
BASE TAXABLE VALUE		133,330
TOTAL JUST VALUE		368,599
NCON VALUE		0
INCOME VALUE		
PREVIOUS YEAR MKT VALUE		333,787

PERMIT NUM	DESCRIPTION	AMT	ISSUED
C1632624	CO ISSUED	0	02/28/2017
B1632624	NEW CONSTR	203,664	07/01/2016
R08678	REPAIR/RRF	5,000	12/01/2005
B16777	NEW CONSTR	179,883	12/01/2005

SALES DATA

OFF RECORD Number	DATE	TYPE INST	Q / U	V / I	RSN CD	SALE PRICE
2291/1411	7/10/2019	WD	U	I	11	100
GRANTOR: WILDER O ELAINE						
GRANTEE: WILDER ERNEST TERRY						
1897/0951	1/02/2014	QC	U	V	11	100
GRANTOR: WILDER O ELAINE						
GRANTEE: WILDER ERNEST TERRY						

BUILDING NOTES

BUILDING DIMENSIONS

FCP=[YR=2017] W22 S30 FOP=[YR=2017] S8 BAS=[YR=2017] W6 FEP=[YR=2017] W13 S14 E13 N14$ S14 W13 N14 W13 S40 E11 S5 E15 FOP=[YR=2017] E18 N7 W18 S7$ N7 E18 N38 W12$ E12 N8 W12 $ E22 N30$.

EXTRA FEATURES

LN	OB/XF CODE	DESCRIPTION	BLD	CAP	L	W	UNITS	UT	Adj R	ADJ UNIT PRICE	ORIG COND	YEAR ON	YEAR ACTUAL	Q	% COND	OB/XF MKT VALUE	NOTES
1	0811	CONCRETE B	0	100	0	0	905.00	SF	5.20	5.20	100	2017	2017	3	96	4,518	
2	0811	CONCRETE B	0	100	24	30	720.00	SF	5.20	5.20	100	2017	2017	3	96	3,594	
3	0810	CONCRETE A	0	100	14	22	308.00	SF	6.50	6.50	100	2017	2017	3	96	1,922	

LAND DESCRIPTION

TOTAL OB/XF 10,034

LN	USE CODE	CLS	LAND USE DESCRIPTION	CAP	RD	LOC ZONE	FRONT	DEPTH	TOT LND UTS	UNIT TYPE	DT	DPTH FACT	% COND	TOT ADJ	UNIT PRICE	ADJ UNIT PRICE	LAND VALUE	OTHER ADJUSTMENTS AND NOTES	YEAR	DENSITY	DECL	FRZ	YR	CONSRV
1	000100	C	RES	100		RSF-	1123.00	193.00	0.53	AC		1.00	1.00	1.65	100,000.00	165,000.00	87,450							

REVIEW DATE 05/12/2019 BY KBA Total Acres: 0.53 Total Land Value: 87,450 Market: 0 Agricultural: 0 Common: 87,450 PRINTED 07/30/2025 BY SYS