PT GOVT LOT 2 OF SEC 34-2N-28E
IN OR 767/960,OR 1128/269 &
ESMT IN OR 228/446

OVERCASH KENNETH W & V CHERYL
95238 WILDER BLVD
FERNANDINA BEACH, FL 32034

2025

34-2N-28-0000-0017-0000

NASSAU COUNTY PROPERTY

BUILDING CHARACTERISTICS

ELEMENT	CD	CONSTRUCTION
Exterior Wall	05	AVERAGE 100
Roof Structur	03	GABLE/HIP 100
Roof Cover	03	COMP SHNGL 100
Interior Wall	05	DRYWALL 100
Interior Floo	08	SHT VINYL 50
Interior Floo	14	CARPET 50
Air Condition	03	CENTRAL 100
Heating Type	04	AIR DUCTED 100
Bedrooms		3 100
Bathrooms		3 100
Frame	02	WOOD FRAME 100
Stories	2.	2. 100
Units		0 100
BUD8 Adjustme	04	DIST 01 100
Occupancy	00	NONE 100
Quality	01	Quality Level 01
DOR CODE	0100	SINGLE FAMILY
MAP NUM		MKT AREA 04
NEIGHBORHOOD/LOC	4009.00	

AREA TYPE	TOTAL GROSS AREA	PCT OF BASE	YEAR	TOT ADJ AREA	SUBAREA MARKET VALUE
BAS	1,010	100	1993	1,010	94,061
BAS	397	100	2010	397	36,972
FGR	210	55	1993	116	10,803
FOP	24	30	1993	7	652
FOP	12	30	2010	4	373
FOP	372	30	2010	112	10,430
FOP	660	30	2010	198	18,440
FUS	1,929	100	1993	1,929	179,648
TOTALS	4,614			3,773	351,380

MARKET ADJUSTMENTS

TYPE	MDL	EFF. AREA	TOT ADJ PTS	EFF. BASE RATE	REPL. COST NEW	AYB	EYB	ECON	FNCT		NORM	% COND
0900	01	3,773	84.2400	111.20	419,558	1978	1988	0	0	0	16.25	83.75

1 SNGL FAM – 100% - 1998 Heated Area: 3336 HX Base Yr 1998

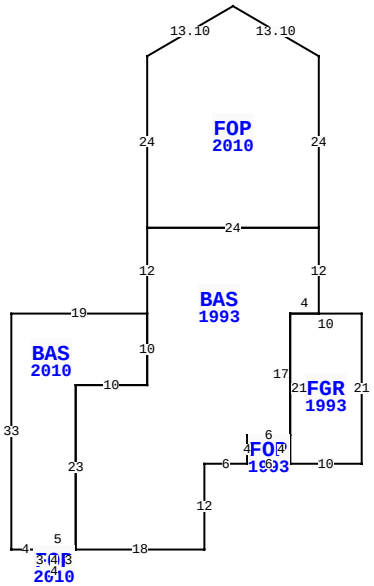

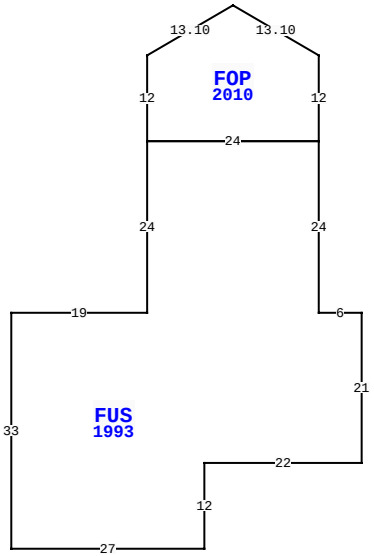

95238 WILDER BLVD, FERNANDINA BEACH

BLD DATE	06/01/2023 NW	LGL DATE	
XF DATE		LAND DATE	05/09/2025 MLU
INC DATE		AG DATE	

VALUATION SUMMARY

VALUATION BY		STANDARD
Tax Group: 4	Tax Dist:	
BUILDING MARKET VALUE		453,443
TOTAL MARKET OB/XF VALUE		51,436
TOTAL LAND VALUE - MARKET		2,080,000
TOTAL MARKET VALUE		2,584,879
SOH/AGL Deduction		1,782,163
ASSESSED VALUE		802,716
TOTAL EXEMPTION VALUE	HX HB DX	55,722
BASE TAXABLE VALUE		746,994
TOTAL JUST VALUE		2,584,879
NCON VALUE		0
INCOME VALUE		
PREVIOUS YEAR MKT VALUE		2,341,153

PERMIT NUM	DESCRIPTION	AMT	ISSUED
R1703913	REPAIR/RRF	23,450	06/01/2017
B006766	GARAGE	21,600	01/01/2000
1197	H/AC	1,800	03/01/1988

SALES DATA

OFF RECORD Number	DATE	TYPE INST	Q U	V I	RSN CD	SALE PRICE
0767/0960	8/05/1996	WD	U	I	09	325,000
GRANTOR: FROSCHER CLARENCE T &						
GRANTEE: OVERCASH KENNETH W						
0212/0517	1/01/1976	WD	Q	I		34,000
GRANTOR:						
GRANTEE:						

BUILDING NOTES

BUILDING DIMENSIONS

FOP=[YR=2010] N24 U7 L12 D7 L12 S24 BAS=[YR=1993] S12 BAS=[YR=2010] W19 S33 E4 FOP=[YR=2010] S3 E4 N3 W4 $ E5 N23 E10 N10 $ S10 W10 S23 E18 N12 E6 FOP=[YR=1993] E6 FGR=[YR=1993] E10 N21 W10 S21 $ N4 W6 S4 $ N4 E6 N17 E4 N12 W24 $ E24 $ PTR= E30 FUS=[YR=1993] E19 N24 FOP=[YR=2010] N12 U7 R12 R12 D7 S12 W24 $ E24 S24 E6 S21 W22 S12 W27 N33 $ W30 $.

EXTRA FEATURES

LN	OB/XF CODE	DESCRIPTION	BLD	CAP	L	W	UNITS	UT	Adj R	ADJ UNIT PRICE	ORIG COND	YEAR ON	YEAR ACTUAL	Q	% COND	OB/XF MKT VALUE	NOTES
1	0810	CONCRETE A	0	100	20	5	100.00	SF	6.50	6.50	100	1985	1985	3	44	286	
2	0810	CONCRETE A	0	100	23	3	69.00	SF	6.50	6.50	100	1985	1985	3	44	197	
3	0500	FP-PRE FAB	0	100	0	0	1.00	UT	3,500.00	3,500.00	100	1978	1978	3	40	1,400	
4	0811	CONCRETE B	0	100	0	0	872.00	SF	5.20	5.20	100	1980	1980	3	30	1,360	
5	0820	WOOD WALK	0	100	42	4	168.00	SF	7.76	7.76	100	1978	1978	3	40	521	
6	0410	ELEVATOR	0	100	0	0	1.00	UT	10,000.00	10,000.00	100	0	0	3	100	10,000	
7	0811	CONCRETE B	0	100	80	10	800.00	SF	5.20	5.20	100	1981	1981	3	32.5	1,352	
8	0303	FLT DOCK W	0	100	20	10	200.00	SF	32.50	32.50	100	1994	1994	3	20	1,300	
9	0323	BOAT LFT H	0	100	0	0	1.00	UT	2,500.00	2,500.00	100	1994	1994	3	20	500	
10	0300	BOAT DCK W	0	100	0	0	530.00	SF	62.00	62.00	100	1994	1994	3	20	6,572	

LAND DESCRIPTION

TOTAL OB/XF 23,488

LN	USE CODE	CLS	LAND USE DESCRIPTION	CAP	RD	LOC ZONE	FRONT	DEPTH	TOT LND UTS	UNIT TYPE	DT	DPTH FACT	% COND	TOT ADJ	UNIT PRICE	ADJ UNIT PRICE	LAND VALUE	OTHER ADJUSTMENTS AND NOTES	YEAR	DENSITY	DECL	FRZ	YR	CONSRV
1	000132	C	RES RIVER	100	0006	RSF-1	100.00	480.00	100.00	FF		1.00	1.00	0.80	8,000.00	6,400.00	640,000							
2	000132	C	RES RIVER	100		RSF-1	100.00	515.00	100.00	FF		1.00	1.00	0.80	8,000.00	6,400.00	640,000							
3	000132	C	RES RIVER	100		RSF-1	0.00	0.00	125.00	FF		1.00	1.00	0.80	8,000.00	6,400.00	800,000							

REVIEW DATE 01/23/2019 BY KWX Total Acres: 0.00 Total Land Value: 2,080,000 Market: 0 Agricultural: 0 Common: 2,080,000 PRINTED 07/30/2025 BY SYS

PT GOVT LOT 2 OF SEC 34-2N-28E
IN OR 767/960,OR 1128/269 &
ESMT IN OR 228/446

OVERCASH KENNETH W & V CHERYL
95238 WILDER BLVD
FERNANDINA BEACH, FL 32034

2025

34-2N-28-0000-0017-0000

NASSAU COUNTY PROPERTY

BUILDING CHARACTERISTICS

ELEMENT	CD	CONSTRUCTION
Exterior Wall	04	SINGLE SID 100
Roof Structur	03	GABLE/HIP 100
Roof Cover	03	COMP SHNGL 100
Interior Wall	05	DRYWALL 100
Interior Floo	08	SHT VINYL 100
Air Condition	03	CENTRAL 100
Heating Type	04	AIR DUCTED 100
Bedrooms		3 100
Bathrooms		2 100
Frame	02	WOOD FRAME 100
Stories	1.	1. 100
Units		0 100
BUD8 Adjustme	04	DIST 01 100
Occupancy	00	NONE 100
Quality	04	Quality Level 04

DOR CODE 0100 SINGLE FAMILY
MAP NUM | MKT AREA 04
NEIGHBORHOOD/LOC 4009.00

AREA TYPE	TOTAL GROSS AREA	PCT OF BASE	YEAR	TOT ADJ AREA	SUBAREA MARKET VALUE
BAS	1,089	100	1993	1,089	85,825
FOP	115	30	1993	34	2,680
TOTALS	1,204			1,123	88,504

MARKET ADJUSTMENTS

TYPE	MDL	EFF. AREA	TOT ADJ PTS	EFF. BASE RATE	REPL. COST NEW	AYB	EYB	ECON	FNCT		NORM	% COND
0100	01	1,123	107.9610	107.96	121,239	1950	1985	0	0	0	27.00	73.00

2 SINGLE FAM – 0% - 1998 Heated Area: 1089 HX Base Yr 1998

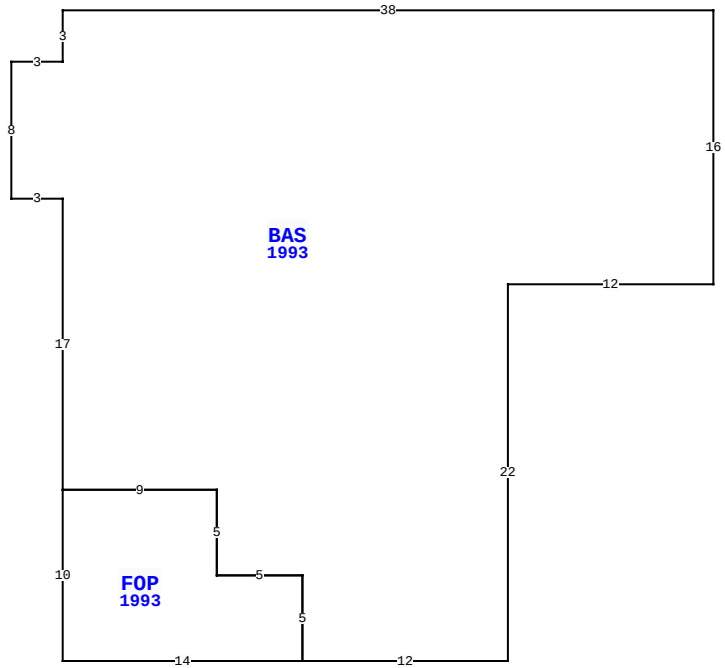

BLD DATE	06/01/2023 NW	LGL DATE	
XF DATE		LAND DATE	05/09/2025 MLU
INC DATE		AG DATE	

95238 WILDER BLVD, FERNANDINA BEACH

VALUATION SUMMARY

VALUATION BY		STANDARD
Tax Group: 4	Tax Dist:	
BUILDING MARKET VALUE		453,443
TOTAL MARKET OB/XF VALUE		51,436
TOTAL LAND VALUE - MARKET		2,080,000
TOTAL MARKET VALUE		2,584,879
SOH/AGL Deduction		1,782,163
ASSESSED VALUE		802,716
TOTAL EXEMPTION VALUE	HX HB DX	55,722
BASE TAXABLE VALUE		746,994
TOTAL JUST VALUE		2,584,879
NCON VALUE		0
INCOME VALUE		
PREVIOUS YEAR MKT VALUE		2,341,153

PERMIT NUM	DESCRIPTION	AMT	ISSUED

SALES DATA

OFF RECORD Number	DATE	TYPE INST	Q / U	V / I	RSN CD	SALE PRICE
0767/0960	8/05/1996	WD	U	I	09	325,000
GRANTOR: FROSCHER CLARENCE T &						
GRANTEE: OVERCASH KENNETH W						
0212/0517	1/01/1976	WD	Q	I		34,000
GRANTOR:						
GRANTEE:						

BUILDING NOTES

BUILDING DIMENSIONS

BAS=[YR=1993] W38 S3 W3 S8 E3 S17 FOP=[YR=1993] S10 E14 N5 W5 N5 W9$ E9 S5 E5 S5 E12 N22 E12 N16$.

EXTRA FEATURES

LN	OB/XF CODE	DESCRIPTION	BLD	CAP	L	W	UNITS	UT	Adj R	ADJ UNIT PRICE	ORIG COND	YEAR ON	YEAR ACTUAL	Q	% COND	OB/XF MKT VALUE	NOTES
11	0510	GARAGE WD-	0	100	0	0	1,088.00	SF	35.00	35.00	100	1995	1995	3	20	7,616	
12	0803	ASPHALT C	0	100	0	0	4,976.00	SF	2.00	2.00	100	1991	1991	3	50	4,976	
13	0300	BOAT DCK W	0	100	5	52	260.00	SF	60.00	60.00	100	2001	2001	3	28	4,368	
14	0316	DCK PLNG C	0	100	0	0	2.00	UT	2,000.00	2,000.00	100	2001	2001	3	20	800	
15	0937	WELL	0	100	0	0	1.00	UT	6,000.00	6,000.00	100	2001	2001	3	100	6,000	
16	0310	AL GANG WY	0	100	0	0	20.00	LF	115.00	115.00	100	2002	2002	3	20	460	
17	0350	CARPORT WD	0	100	20	14	280.00	SF	13.00	13.00	100	1995	1995	3	20	728	
18	0306	BOAT RAMP	0	100	0	0	1.00	UT	3,000.00	3,000.00	100	1995	1995	3	100	3,000	

LAND DESCRIPTION

TOTAL OB/XF 27,948

LN	USE CODE	CLS	LAND USE DESCRIPTION	CAP	RD	LOC ZONE	FRONT	DEPTH	TOT LND UTS	UNIT TYPE	DT	DPTH FACT	% COND	TOT ADJ	UNIT PRICE	ADJ UNIT PRICE	LAND VALUE	OTHER ADJUSTMENTS AND NOTES	YEAR	DENSITY	DECL	FRZ	YR	CONSRV

REVIEW DATE 01/23/2019 BY KWX Total Acres: 0.00 Total Land Value: 2,080,000 Market: 0 Agricultural: 0 Common: 2,080,000 PRINTED 07/30/2025 BY SYS

PT GOVT LOT 2 OF SEC 34-2N-28E
IN OR 767/960,OR 1128/269 &
ESMT IN OR 228/446

OVERCASH KENNETH W & V CHERYL
95238 WILDER BLVD
FERNANDINA BEACH, FL 32034

2025

34-2N-28-0000-0017-0000

NASSAU COUNTY PROPERTY

BUILDING CHARACTERISTICS

ELEMENT	CD	CONSTRUCTION
Exterior Wall	15	CONC BLOCK 100
Roof Structur	03	GABLE/HIP 100
Roof Cover	03	COMP SHNGL 100
Interior Wall	01	MINIMUM 100
Interior Floo	03	CONC FINSH 100
Air Condition	99	N/A 100
Heating Type		N/A 100
Bedrooms		0 100
Bathrooms		0 100
Frame	02	WOOD FRAME 100
Stories	1.5	1.5 100
Units		0 100
Occupancy	00	NONE 100
Quality	03	Quality Level 03

DOR CODE 0100 SINGLE FAMILY
MAP NUM | MKT AREA 04
NEIGHBORHOOD/LOC 4009.00

AREA TYPE	TOTAL GROSS AREA	PCT OF BASE	YEAR	TOT ADJ AREA	SUBAREA MARKET VALUE
BAS	873	100	2000	873	11,094
UST	432	45	2000	194	2,465
TOTALS	1,305			1,067	13,559

MARKET ADJUSTMENTS

TYPE	MDL	EFF. AREA	TOT ADJ PTS	EFF. BASE RATE	REPL. COST NEW	AYB	EYB	ECON	FNCT		NORM	% COND
6500	01	1,067	57.2400	21.18	22,599	2000	2000	0	0	0	40.00	60.00

3 GARAGE RES – 100% - 1998 Heated Area: 873 HX Base Yr 1998

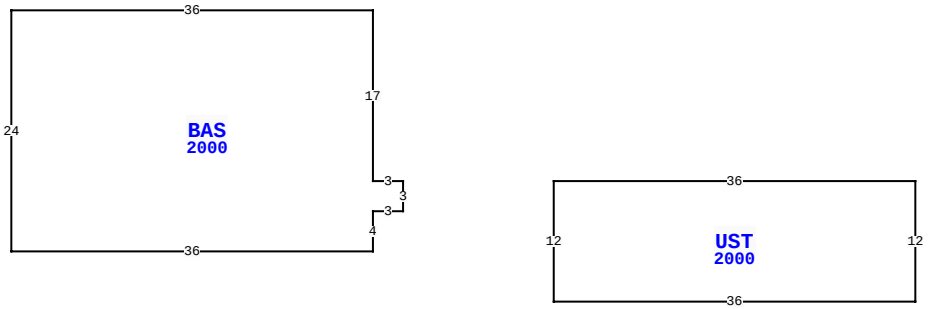

BLD DATE	06/01/2023	NW	LGL DATE
XF DATE			LAND DATE 05/09/2025 MLU
INC DATE			AG DATE

95238 WILDER BLVD, FERNANDINA BEACH

VALUATION SUMMARY

VALUATION BY		STANDARD
Tax Group: 4	Tax Dist:	
BUILDING MARKET VALUE		453,443
TOTAL MARKET OB/XF VALUE		51,436
TOTAL LAND VALUE - MARKET		2,080,000
TOTAL MARKET VALUE		2,584,879
SOH/AGL Deduction		1,782,163
ASSESSED VALUE		802,716
TOTAL EXEMPTION VALUE	HX HB DX	55,722
BASE TAXABLE VALUE		746,994
TOTAL JUST VALUE		2,584,879
NCON VALUE		0
INCOME VALUE		
PREVIOUS YEAR MKT VALUE		2,341,153

PERMIT NUM	DESCRIPTION	AMT	ISSUED

SALES DATA

OFF RECORD Number	DATE	TYPE INST	Q / U	V / I	RSN CD	SALE PRICE
0767/0960	8/05/1996	WD	U	I	09	325,000
GRANTOR: FROSCHER CLARENCE T &						
GRANTEE: OVERCASH KENNETH W						
0212/0517	1/01/1976	WD	Q	I		34,000
GRANTOR:						
GRANTEE:						

BUILDING NOTES

BUILDING DIMENSIONS

BAS=[YR=2000] W3 N17 W36 S24 E36 N4 E3 N3 $ PTR= E15
UST=[YR=2000] E36 S12 W36 N12 $ W15 $.

EXTRA FEATURES

L N	OB/XF CODE	DESCRIPTION	BLD	CAP	L	W	UNITS	UT	Adj R	ADJ UNIT PRICE	ORIG COND	YEAR ON	YEAR ACTUAL	Q	% COND	OB/XF MKT VALUE	NOTES

LAND DESCRIPTION

TOTAL OB/XF 0

L N	USE CODE	CLS	LAND USE DESCRIPTION	CAP	R D	LOC ZONE	FRONT	DEPTH	TOT LND UTS	UNIT TYPE	D T	DPTH FACT	% COND	TOT ADJ	UNIT PRICE	ADJ UNIT PRICE	LAND VALUE	OTHER ADJUSTMENTS AND NOTES	YEAR	DENSITY	DECL	FRZ	YR	CONSRV

REVIEW DATE 01/23/2019 BY KWX Total Acres: 0.00 Total Land Value: 2,080,000 Market: 0 Agricultural: 0 Common: 2,080,000 PRINTED 07/30/2025 BY SYS