PT OF NE1/4 OF SW1/4
IN OR 436 PG 731

CONNER LAWRENCE ALVIN
18700 CONNER ROAD
HILLIARD, FL 32046

2025

34-2N-23-0000-0007-0020

NASSAU COUNTY PROPERTY

BUILDING CHARACTERISTICS

ELEMENT	CD	CONSTRUCTION
Exterior Wall	12	CEDAR 100
Roof Structur	03	GABLE/HIP 100
Roof Cover	03	COMP SHNGL 100
Interior Wall	05	DRYWALL 100
Interior Floo	14	CARPET 100
Air Condition	03	CENTRAL 100
Heating Type	04	AIR DUCTED 100
Bedrooms		3 100
Bathrooms		3 100
Frame	02	WOOD FRAME 100
Stories	2.	2. 100
Units		0 100
BUD8 Adjustme	06	DIST 1D 100
Occupancy	00	NONE 100
Quality	05	Quality Level 05

DOR CODE	5000	IMPROVED AG	
MAP NUM		MKT AREA	09
NEIGHBORHOOD/LOC	9001.00		

AREA TYPE	TOTAL GROSS AREA	PCT OF BASE	YEAR	TOT ADJ AREA	SUBAREA MARKET VALUE
BAS	1,196	100	1993	1,196	155,911
FEP	128	80	1993	102	13,297
FOP	841	30	1993	252	32,851
FSP	128	40	1993	51	6,648
FUS	1,229	100	1993	1,229	160,212
TOTALS	3,522			2,830	368,920

MARKET ADJUSTMENTS

TYPE	MDL	EFF. AREA	TOT ADJ PTS	EFF. BASE RATE	REPL. COST NEW	AYB	EYB	ECON	FNCT		NORM	% COND
0900	01	2,830	118.2720	156.12	441,820	1986	1991	0	0	0	16.50	83.50

1 SNGL FAM – 100% - 1996 Heated Area: 2425 HX Base Yr 1996

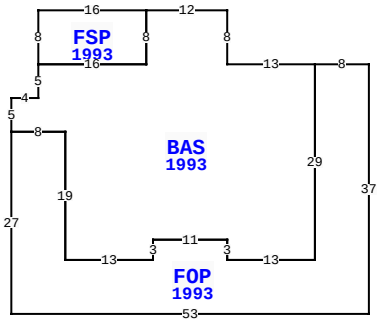

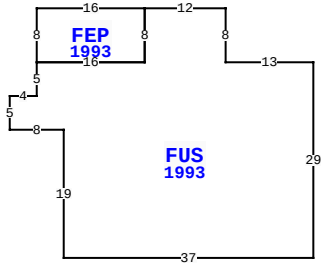

18700 CONNER RD, HILLIARD

BLD DATE		LGL DATE	
XF DATE		LAND DATE	05/21/2025 MLU
INC DATE		AG DATE	11/04/2024 KBA

VALUATION SUMMARY

VALUATION BY		STANDARD
Tax Group: 6	Tax Dist:	
BUILDING MARKET VALUE		368,920
TOTAL MARKET OB/XF VALUE		9,637
TOTAL LAND VALUE - MARKET		165,000
TOTAL MARKET VALUE		425,037
SOH/AGL Deduction		254,044
ASSESSED VALUE		170,993
TOTAL EXEMPTION VALUE	HX HB	50,722
BASE TAXABLE VALUE		120,271
TOTAL JUST VALUE		543,557
NCON VALUE		0
INCOME VALUE		
PREVIOUS YEAR MKT VALUE		467,208

PERMIT NUM	DESCRIPTION	AMT	ISSUED
8581	GARAGE	13,872	12/28/1992

SALES DATA

OFF RECORD Number	DATE	TYPE INST	Q / U	V / I	RSN CD	SALE PRICE
0436/0731	10/01/1984	WD	U	V		100

GRANTOR:

GRANTEE:

BUILDING NOTES

BUILDING DIMENSIONS

FOP=[YR=1993] W8 BAS=[YR=1993] W13 N8 W12 FSP=[YR=1993] W16 S8 E16 N8 $ S8 W16 S5 W4 S5 E8 S19 E13 N3 E11 S3 E13 N29$ S29 W13 N3 W11 S3 W13 N19 W8 S27 E53 N37$ PTR= E40 FEP=[YR=1993] E16 FUS=[YR=1993] E12 S8 E13 S29 W37 N19 W8 N5 E4 N5 E16 N8 $ S8 W16 N8$ W40$.

EXTRA FEATURES

LN	OB/XF CODE	DESCRIPTION	BLD	CAP	L	W	UNITS	UT	Adj R	ADJ UNIT PRICE	ORIG COND	YEAR ON	YEAR ACTUAL	Q	% COND	OB/XF MKT VALUE	NOTES
1	0504	FP-ELECTRI	0	100	0	0	1.00	UT	2,000.00	2,000.00	100	1986	1986	3	58	1,160	
2	0510	GARAGE WD-	0	100	24	34	816.00	SF	35.00	35.00	100	1993	1993	3	20	5,712	
3	0812	CONCRETE C	0	100	0	0	1,080.00	SF	4.00	4.00	100	1993	1993	3	64	2,765	

LAND DESCRIPTION

TOTAL OB/XF 9,637

LN	USE CODE	CLS	LAND USE DESCRIPTION	CAP	RD	LOC ZONE	FRONT	DEPTH	TOT LND UTS	UNIT TYPE	DT	DPTH FACT	% COND	TOT ADJ	UNIT PRICE	ADJ UNIT PRICE	LAND VALUE	OTHER ADJUSTMENTS AND NOTES	YEAR	DENSITY	DECL	FRZ	YR	CONSRV
1	005000	C	AGRICULTURAL	100	0005	OR	0.00	0.00	1.00	AC		1.00	1.00	1.00	45,000.00	45,000.00	45,000							
2	006000	A	PASTURE - HA	0		OR	0.00	0.00	4.00	AC		1.00	1.00	1.00	370.00	370.00	1,480							
3	009910	M	MARKET VALUE	0		OR	0.00	0.00	4.00	AC		1.00	1.00	1.00	30,000.00	30,000.00	120,000							

REVIEW DATE 08/09/2021 BY TWA Total Acres: 5.00 Total Land Value: 46,480 Market: 120,000 Agricultural: 1,480 Common: 45,000 PRINTED 07/30/2025 BY SYS