PT E1/2 & PT NW1/4 OF
SEC 34-2N-23E IN OR 1919/1205
(EX UTIL ESMT IN OR 1795/1500)

SMITH KIMBERLY JO
18811 CONNER RD
HILLIARD, FL 32046

2025

34-2N-23-0000-0002-0000

NASSAU COUNTY PROPERTY

BUILDING CHARACTERISTICS

ELEMENT	CD	CONSTRUCTION
Exterior Wall	25	MOD METAL 100
Roof Structur	03	GABLE/HIP 100
Roof Cover	12	MODULAR MT 100
Interior Wall		N/A 100
Interior Floo	03	CONC FINSH 100
Air Condition	03	CENTRAL 100
Heating Type	04	AIR DUCTED 100
Bedrooms		0 100
Bathrooms		0 100
Frame	05	STEEL 100
Stories	0	0 100
Units		0 100
Occupancy	00	NONE 100
Quality	06	Quality Level 06

DOR CODE 5500 TIMBERLAND 80-89
MAP NUM | MKT AREA 09
NEIGHBORHOOD/LOC 9001.00

AREA TYPE	TOTAL GROSS AREA	PCT OF BASE	YEAR	TOT ADJ AREA	SUBAREA MARKET VALUE
BAS	1,600	100	2020	1,600	38,661
TOTALS	1,600			1,600	38,661

MARKET ADJUSTMENTS

TYPE	MDL	EFF. AREA	TOT ADJ PTS	EFF. BASE RATE	REPL. COST NEW	AYB	EYB	ECON	FNCT		NORM	% COND
6500	01	1,600	68.0340	25.17	40,272	2020	2020	0	0	0	4.00	96.00

2 GARAGE RES – 100% - 2021 Heated Area: 1600 HX Base Yr 2021

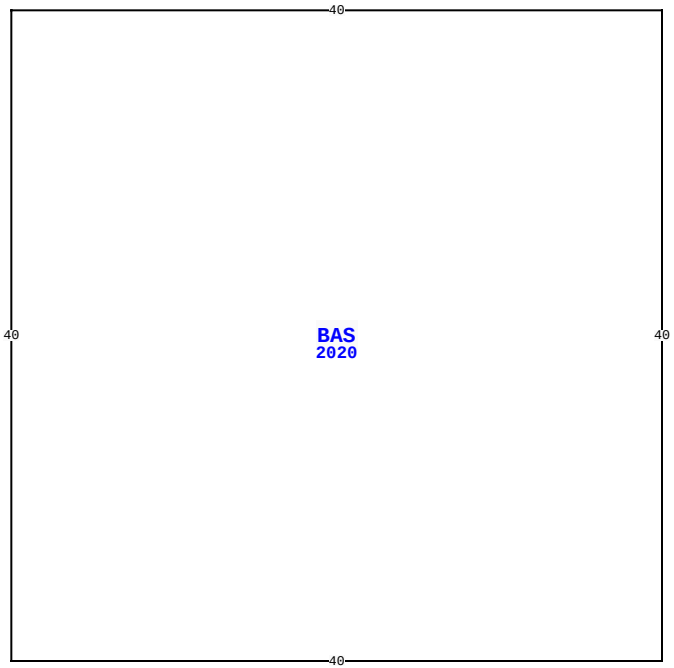

18811 CONNER RD, HILLIARD

BLD DATE		LGL DATE	
XF DATE		LAND DATE	05/21/2025 MLU
INC DATE		AG DATE	11/04/2024 KBA

VALUATION SUMMARY

VALUATION BY		STANDARD
Tax Group: 6	Tax Dist:	
BUILDING MARKET VALUE		590,992
TOTAL MARKET OB/XF VALUE		62,896
TOTAL LAND VALUE - MARKET		265,011
TOTAL MARKET VALUE		729,147
SOH/AGL Deduction		56,180
ASSESSED VALUE		672,967
TOTAL EXEMPTION VALUE	HX HB	50,722
BASE TAXABLE VALUE		622,245
TOTAL JUST VALUE		918,899
NCON VALUE		0
INCOME VALUE		
PREVIOUS YEAR MKT VALUE		857,979

PERMIT NUM	DESCRIPTION	AMT	ISSUED
B250004871	NEW RES AC	79,440	05/06/2025
21016450	CO ISSUED	0	11/29/2021
20012262	NEW CONSTR	446,897	12/09/2020
20004390	GARAGE	77,280	05/21/2020
B1429346	XFOB	0	09/01/2014
B26249	ADDITION	12,226	08/02/2012

SALES DATA

OFF RECORD Number	DATE	TYPE INST	Q U /	V I /	RSN CD	SALE PRICE
1918/1205	5/22/2014	WD	Q	I	01	173,000
GRANTOR: CONNER JIMMIE R						
GRANTEE: SMITH KIMBERLY JO						
0807/1834	9/29/1997	PR	Q	V	01	100
GRANTOR: CONNER JIMMIE R P/R						
GRANTEE: CONNER JIMMIE R						

BUILDING NOTES

BUILDING DIMENSIONS

BAS=[YR=2020] W40 S40 E40 N40$.

EXTRA FEATURES

LN	OB/XF CODE	DESCRIPTION	BLD	CAP	L	W	UNITS	UT	Adj R	ADJ UNIT PRICE	ORIG COND	YEAR ON	YEAR ACTUAL	Q	% COND	OB/XF MKT VALUE	NOTES
1	0510	GARAGE WD-	0	0	20	15	300.00	SF	35.00	35.00	100	2012	2012	3	64	6,720	
2	0351	CARPORT MT	0	0	0	0	1,020.00	SF	10.00	10.00	100	2012	2012	3	50	5,100	
3	0681	POLE SHED	0	0	50	48	2,400.00	SF	15.00	15.00	100	2014	2014	3	71	25,560	
4	1242	WD DECK A	0	100	0	0	200.00	SF	10.00	10.00	100	2020	2020	3	86	1,720	
5	0504	FP-ELECTRI	0	100	0	0	2.00	UT	2,000.00	2,000.00	100	2021	2021	3	99	3,960	
6	0812	CONCRETE C	0	100	0	0	5,009.00	SF	4.00	4.00	100	2021	2021	3	99	19,836	

LAND DESCRIPTION

TOTAL OB/XF 62,896

LN	USE CODE	CLS	LAND USE DESCRIPTION	CAP	RD	LOC ZONE	FRONT	DEPTH	TOT LND UTS	UNIT TYPE	DT	DPTH FACT	% COND	TOT ADJ	UNIT PRICE	ADJ UNIT PRICE	LAND VALUE	OTHER ADJUSTMENTS AND NOTES	YEAR	DENSITY	DECL	FRZ	YR	CONSRV
1	005000	C	AGRICULTURAL	100	0005	OR	0.00	0.00	1.00	AC		1.00	1.00	1.00	45,000.00	45,000.00	45,000							
2	005010	A	SERVICE ACRE	0		OR	0.00	0.00	1.00	AC		1.00	1.00	1.00	500.00	500.00	500							
3	005501	A	TIMBER 2 P S	0		OR	0.00	0.00	43.76	AC		1.00	1.00	1.00	515.00	515.00	22,536							
4	005902	A	HARDWOOD SI	0		OR	0.00	0.00	4.91	AC		1.00	1.00	1.00	190.00	190.00	933							
5	006000	A	PASTURE - HA	0		OR	0.00	0.00	17.00	AC		1.00	1.00	1.00	370.00	370.00	6,290							
6	009910	M	MARKET VALUE	0		OR	0.00	0.00	66.67	AC		1.00	1.00	0.60	5,500.00	3,300.00	220,011							

REVIEW DATE 05/31/2022 BY TW Total Acres: 67.67 Total Land Value: 75,259 Market: 220,011 Agricultural: 30,259 Common: 45,000 PRINTED 07/30/2025 BY SYS

PT E1/2 & PT NW1/4 OF
SEC 34-2N-23E IN OR 1919/1205
(EX UTIL ESMT IN OR 1795/1500)

SMITH KIMBERLY JO
18811 CONNER RD
HILLIARD, FL 32046

2025

34-2N-23-0000-0002-0000

NASSAU COUNTY PROPERTY

BUILDING CHARACTERISTICS

ELEMENT	CD	CONSTRUCTION
Exterior Wall	31	HARDIE BRD 100
Roof Structur	08	IRREGULAR 100
Roof Cover	12	MODULAR MT 100
Interior Wall	05	DRYWALL 100
Interior Floo	12	HARDWOOD 80
Interior Floo	11	CLAY TILE 20
Air Condition	03	CENTRAL 100
Heating Type	04	AIR DUCTED 100
Bedrooms		3 100
Bathrooms		2.5 100
Frame	02	WOOD FRAME 100
Stories	0	0 100
Units		0 100
Occupancy	00	NONE 100
Quality	04	Quality Level 04
DOR CODE	5500	TIMBERLAND 80-89
MAP NUM		MKT AREA 09
NEIGHBORHOOD/LOC	9001.00	

AREA TYPE	TOTAL GROSS AREA	PCT OF BASE	YEAR	TOT ADJ AREA	SUBAREA MARKET VALUE
BAS	2,006	100	2021	2,006	286,372
FGR	1,008	55	2021	554	79,088
FOP	121	30	2021	36	5,139
FOP	272	30	2021	82	11,706
FOP	272	30	2021	82	11,706
FUS	1,050	100	2021	1,050	149,896
STR	40	10	2021	4	571
STR	77	10	2021	8	1,142
UAT	468	10	2021	47	6,709
TOTALS	5,314			3,869	552,331

MARKET ADJUSTMENTS

TYPE	MDL	EFF. AREA	TOT ADJ PTS	EFF. BASE RATE	REPL. COST NEW	AYB	EYB	ECON	FNCT		NORM	% COND
0900	01	3,869	109.2420	144.20	557,910	2021	2021	0	0	0	1.00	99.00

3 SNGL FAM – 100% - 2021 Heated Area: 3056 HX Base Yr 2021

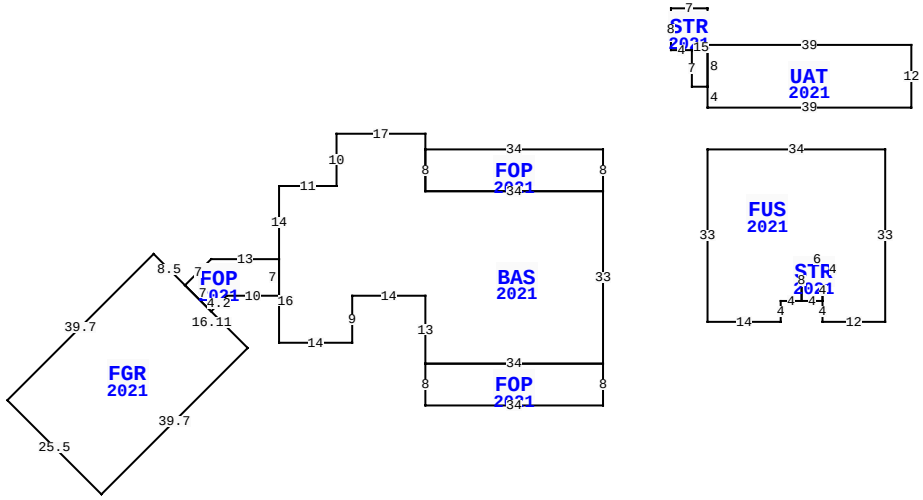

18811 CONNER RD, HILLIARD

BLD DATE		LGL DATE	
XF DATE		LAND DATE	05/21/2025 MLU
INC DATE		AG DATE	11/04/2024 KBA

VALUATION SUMMARY

VALUATION BY		STANDARD
Tax Group: 6	Tax Dist:	
BUILDING MARKET VALUE		590,992
TOTAL MARKET OB/XF VALUE		62,896
TOTAL LAND VALUE - MARKET		265,011
TOTAL MARKET VALUE		729,147
SOH/AGL Deduction		56,180
ASSESSED VALUE		672,967
TOTAL EXEMPTION VALUE	HX HB	50,722
BASE TAXABLE VALUE		622,245
TOTAL JUST VALUE		918,899
NCON VALUE		0
INCOME VALUE		
PREVIOUS YEAR MKT VALUE		857,979

PERMIT NUM	DESCRIPTION	AMT	ISSUED
MH5413	MH	0	06/15/2012
MH5413	MH MOVE-ON	0	05/01/2012
E25048	ELEC OTHER	0	05/01/2012
M17225	AC/MH	0	05/01/2012
P15930	OTHER	0	05/01/2012

SALES DATA

OFF RECORD Number	DATE	TYPE INST	Q / U	V / I	RSN CD	SALE PRICE
1918/1205	5/22/2014	WD	Q	I	01	173,000
GRANTOR: CONNER JIMMIE R						
GRANTEE: SMITH KIMBERLY JO						
0807/1834	9/29/1997	PR	Q	V	01	100
GRANTOR: CONNER JIMMIE R P/R						
GRANTEE: CONNER JIMMIE R						

BUILDING NOTES

BUILDING DIMENSIONS

FOP=[YR=2021] W34 BAS=[YR=2021] N3 W17 S10 W11 S14
FOP=[YR=2021] W13 D5 L5 FGR=[YR=2021] U6 L6 D28 L28
D18 R18 U28 R28 U12 L12 $ D5 R5 U3 R3 E10 N7$ S16 E14
N9 E14 S13 FOP=[YR=2021] S8 E34 N8 W34$ E34 N33 W34 N8$ S8
E34 N8$ PTR=E20 FUS=[YR=2021] E34 S33 W12 N4 STR=[YR=2021] W4
N8 E6 S4 W2 S4$ N4 E2 N4 W6 S8 W4 S4 W14 N33$ PTR=N20
UAT=[YR=2021] E39 S12 W39 N4 STR=[YR=2021] W3 N7 W4 N8 E7
S15$ N8 $ S20$ W20$.

EXTRA FEATURES

L N	OB/XF CODE	DESCRIPTION	BLD	CAP	L	W	UNITS	UT	Adj R	ADJ UNIT PRICE	ORIG COND	YEAR ON	YEAR ACTUAL	Q	% COND	OB/XF MKT VALUE	NOTES

LAND DESCRIPTION

TOTAL OB/XF 0

L N	USE CODE	CLS	LAND USE DESCRIPTION	CAP	R D	LOC ZONE	FRONT	DEPTH	TOT LND UTS	UNIT TYPE	D T	DPTH FACT	% COND	TOT ADJ	UNIT PRICE	ADJ UNIT PRICE	LAND VALUE	OTHER ADJUSTMENTS AND NOTES	YEAR	DENSITY	DECL	FRZ	YR	CONSRV

REVIEW DATE 05/31/2022 BY TW Total Acres: 67.67 Total Land Value: 75,259 Market: 220,011 Agricultural: 30,259 Common: 45,000 PRINTED 07/30/2025 BY SYS